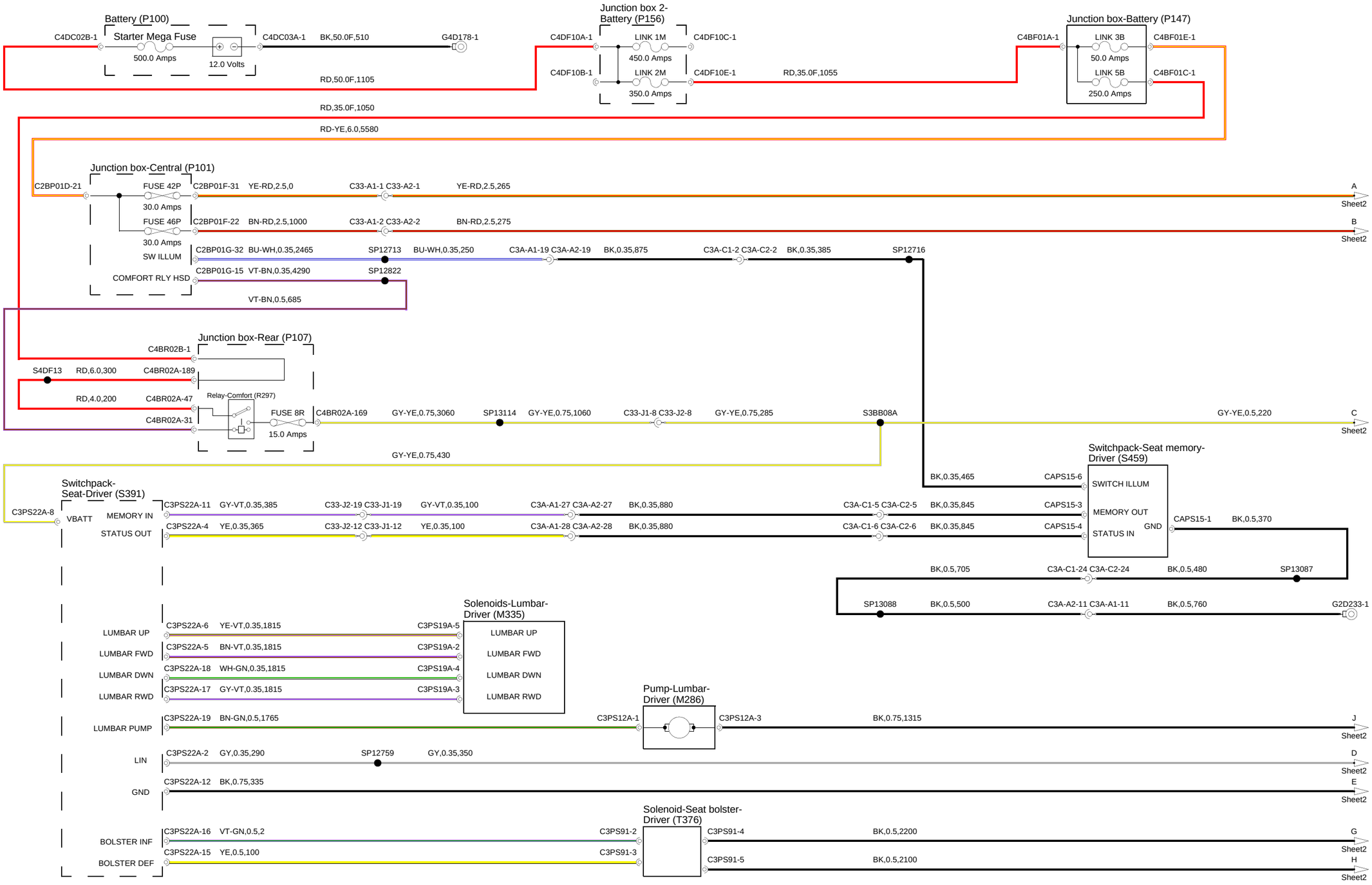
Battery (P100)
C4DC02B-1
Starter Mega Fuse
500.0 Amps
12.0 Volts
C4DC03A-1
BK,50.0F,510
G4D178-1
RD,50.0F,1105
RD,35.0F,1050
RD-YE,6.0,5580
Junction box 2-Battery (P156)
C4DF10A-1
LINK 1M
450.0 Amps
C4DF10C-1
C4DF10B-1
LINK 2M
350.0 Amps
C4DF10E-1
RD,35.0F,1055
Junction box-Battery (P147)
C4BF01A-1
LINK 3B
50.0 Amps
C4BF01E-1
LINK 5B
250.0 Amps
C4BF01C-1
Junction box-Central (P101)
C2BP01D-21
FUSE 42P
30.0 Amps
C2BP01F-31
YE-RD,2.5,0
C33-A1-1 C33-A2-1
YE-RD,2.5,265
A
Sheet2
FUSE 46P
30.0 Amps
C2BP01F-22
BN-RD,2.5,1000
C33-A1-2 C33-A2-2
BN-RD,2.5,275
B
Sheet2
SW ILLUM
C2BP01G-32
BU-WH,0.35,2465
SP12713
BU-WH,0.35,250
C3A-A1-19 C3A-A2-19
BK,0.35,875
C3A-C1-2 C3A-C2-2
BK,0.35,385
SP12716
COMFORT RLY HSD
C2BP01G-15
VT-BN,0.35,4290
SP12822
VT-BN,0.5,685
Junction box-Rear (P107)
C4BR02B-1
S4DF13
RD,6.0,300
C4BR02A-189
RD,4.0,200
C4BR02A-47
C4BR02A-31
Relay-Comfort (R297)
FUSE 8R
15.0 Amps
C4BR02A-169
GY-YE,0.75,3060
SP13114
GY-YE,0.75,1060
C33-J1-8 C33-J2-8
GY-YE,0.75,285
S3BB08A
GY-YE,0.5,220
C
Sheet2
GY-YE,0.75,430
Switchpack-Seat memory-Driver (S459)
BK,0.35,465
CAPS15-6
SWITCH ILLUM
MEMORY OUT
STATUS IN
GND
CAPS15-1
BK,0.5,370
Switchpack-Seat-Driver (S391)
C3PS22A-8
VBATT
MEMORY IN
C3PS22A-11
GY-VT,0.35,385
C33-J2-19 C33-J1-19
GY-VT,0.35,100
C3A-A1-27 C3A-A2-27
BK,0.35,880
C3A-C1-5 C3A-C2-5
BK,0.35,845
CAPS15-3
STATUS OUT
C3PS22A-4
YE,0.35,365
C33-J2-12 C33-J1-12
YE,0.35,100
C3A-A1-28 C3A-A2-28
BK,0.35,880
C3A-C1-6 C3A-C2-6
BK,0.35,845
CAPS15-4
BK,0.5,705
C3A-C1-24 C3A-C2-24
BK,0.5,480
SP13087
SP13088
BK,0.5,500
C3A-A2-11 C3A-A1-11
BK,0.5,760
G2D233-1
Solenoids-Lumbar-Driver (M335)
LUMBAR UP
C3PS22A-6
YE-VT,0.35,1815
C3PS19A-5
LUMBAR FWD
C3PS22A-5
BN-VT,0.35,1815
C3PS19A-2
LUMBAR DWN
C3PS22A-18
WH-GN,0.35,1815
C3PS19A-4
LUMBAR RWD
C3PS22A-17
GY-VT,0.35,1815
C3PS19A-3
Pump-Lumbar-Driver (M286)
LUMBAR PUMP
C3PS22A-19
BN-GN,0.5,1765
C3PS12A-1
C3PS12A-3
BK,0.75,1315
J
Sheet2
LIN
C3PS22A-2
GY,0.35,290
SP12759
GY,0.35,350
D
Sheet2
GND
C3PS22A-12
BK,0.75,335
E
Sheet2
Solenoid-Seat bolster-Driver (T376)
BOLSTER INF
C3PS22A-16
VT-GN,0.5,2
C3PS91-2
C3PS91-4
BK,0.5,2200
G
Sheet2
BOLSTER DEF
C3PS22A-15
YE,0.5,100
C3PS91-3
C3PS91-5
BK,0.5,2100
H
Sheet2

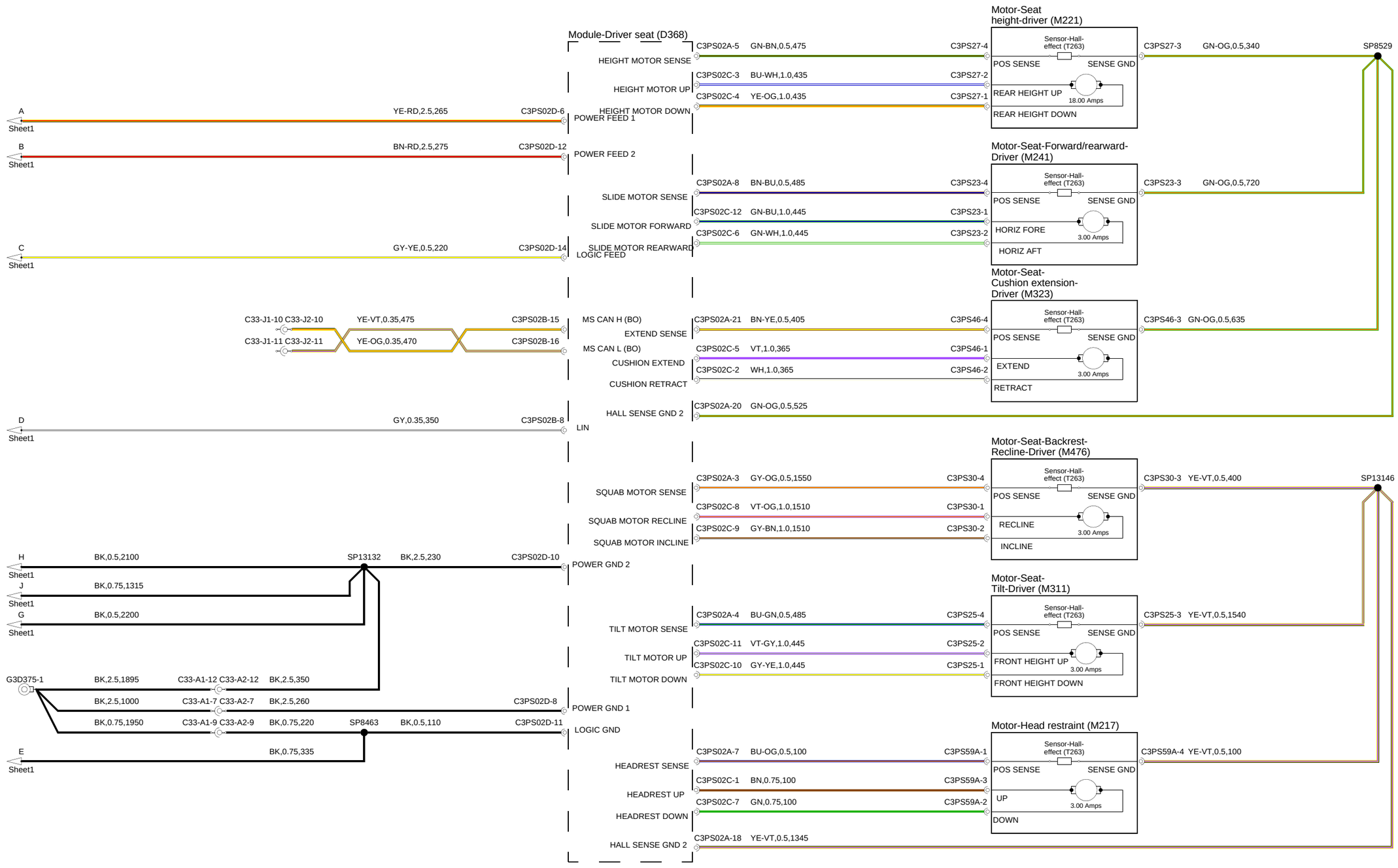
Module-Driver seat (D368)
Motor-Seat height-driver (M221)
Motor-Seat-Forward/rearward-Driver (M241)
Motor-Seat-Cushion extension-Driver (M323)
Motor-Seat-Backrest-Recline-Driver (M476)
Motor-Seat-Tilt-Driver (M311)
Motor-Head restraint (M217)
Sensor-Hall-effect (T263)
POS SENSE
SENSE GND
REAR HEIGHT UP
REAR HEIGHT DOWN
18.00 Amps
HORIZ FORE
HORIZ AFT
3.00 Amps
EXTEND
RETRACT
RECLINE
INCLINE
FRONT HEIGHT UP
FRONT HEIGHT DOWN
UP
DOWN
HEIGHT MOTOR SENSE
HEIGHT MOTOR UP
HEIGHT MOTOR DOWN
POWER FEED 1
POWER FEED 2
SLIDE MOTOR SENSE
SLIDE MOTOR FORWARD
SLIDE MOTOR REARWARD
LOGIC FEED
MS CAN H (BO)
EXTEND SENSE
MS CAN L (BO)
CUSHION EXTEND
CUSHION RETRACT
HALL SENSE GND 2
LIN
SQUAB MOTOR SENSE
SQUAB MOTOR RECLINE
SQUAB MOTOR INCLINE
POWER GND 2
TILT MOTOR SENSE
TILT MOTOR UP
TILT MOTOR DOWN
POWER GND 1
LOGIC GND
HEADREST SENSE
HEADREST UP
HEADREST DOWN
HALL SENSE GND 2
C3PS02A-5 GN-BN,0.5,475 C3PS27-4
C3PS02C-3 BU-WH,1.0,435 C3PS27-2
C3PS02C-4 YE-OG,1.0,435 C3PS27-1
C3PS27-3 GN-OG,0.5,340 SP8529
A Sheet1 YE-RD,2.5,265 C3PS02D-6
B Sheet1 BN-RD,2.5,275 C3PS02D-12
C3PS02A-8 BN-BU,0.5,485 C3PS23-4
C3PS02C-12 GN-BU,1.0,445 C3PS23-1
C3PS02C-6 GN-WH,1.0,445 C3PS23-2
C3PS23-3 GN-OG,0.5,720
C Sheet1 GY-YE,0.5,220 C3PS02D-14
C33-J1-10 C33-J2-10 YE-VT,0.35,475 C3PS02B-15
C33-J1-11 C33-J2-11 YE-OG,0.35,470 C3PS02B-16
C3PS02A-21 BN-YE,0.5,405 C3PS46-4
C3PS02C-5 VT,1.0,365 C3PS46-1
C3PS02C-2 WH,1.0,365 C3PS46-2
C3PS46-3 GN-OG,0.5,635
C3PS02A-20 GN-OG,0.5,525
D Sheet1 GY,0.35,350 C3PS02B-8
C3PS02A-3 GY-OG,0.5,1550 C3PS30-4
C3PS02C-8 VT-OG,1.0,1510 C3PS30-1
C3PS02C-9 GY-BN,1.0,1510 C3PS30-2
C3PS30-3 YE-VT,0.5,400 SP13146
H Sheet1 BK,0.5,2100 SP13132 BK,2.5,230 C3PS02D-10
J Sheet1 BK,0.75,1315
G Sheet1 BK,0.5,2200
C3PS02A-4 BU-GN,0.5,485 C3PS25-4
C3PS02C-11 VT-GY,1.0,445 C3PS25-2
C3PS02C-10 GY-YE,1.0,445 C3PS25-1
C3PS25-3 YE-VT,0.5,1540
G3D375-1 BK,2.5,1895 C33-A1-12 C33-A2-12 BK,2.5,350
BK,2.5,1000 C33-A1-7 C33-A2-7 BK,2.5,260 C3PS02D-8
BK,0.75,1950 C33-A1-9 C33-A2-9 BK,0.75,220 SP8463 BK,0.5,110 C3PS02D-11
E Sheet1 BK,0.75,335
C3PS02A-7 BU-OG,0.5,100 C3PS59A-1
C3PS02C-1 BN,0.75,100 C3PS59A-3
C3PS02C-7 GN,0.75,100 C3PS59A-2
C3PS59A-4 YE-VT,0.5,100
C3PS02A-18 YE-VT,0.5,1345

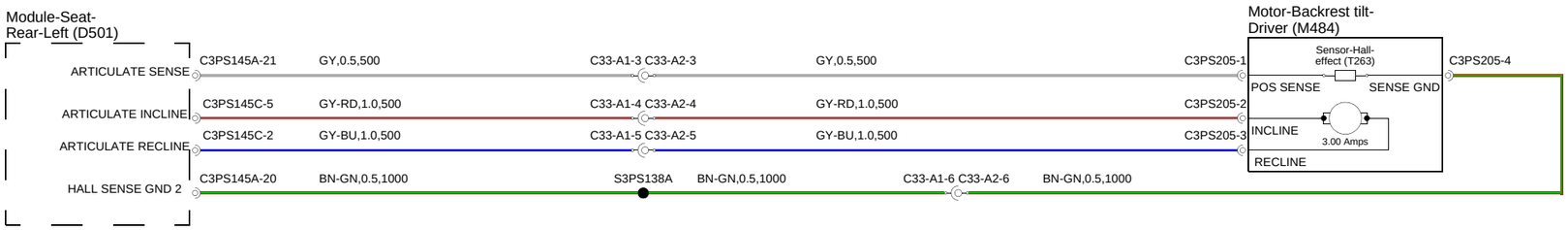
Module-Seat-
Rear-Left (D501)
ARTICULATE SENSE
ARTICULATE INCLINE
ARTICULATE RECLINE
HALL SENSE GND 2
C3PS145A-21
GY,0.5,500
C33-A1-3 C33-A2-3
GY,0.5,500
C3PS205-1
C3PS145C-5
GY-RD,1.0,500
C33-A1-4 C33-A2-4
GY-RD,1.0,500
C3PS205-2
C3PS145C-2
GY-BU,1.0,500
C33-A1-5 C33-A2-5
GY-BU,1.0,500
C3PS205-3
C3PS145A-20
BN-GN,0.5,1000
S3PS138A
BN-GN,0.5,1000
C33-A1-6 C33-A2-6
BN-GN,0.5,1000
Motor-Backrest tilt-
Driver (M484)
Sensor-Hall-
effect (T263)
POS SENSE
SENSE GND
INCLINE
3.00 Amps
RECLINE
C3PS205-4

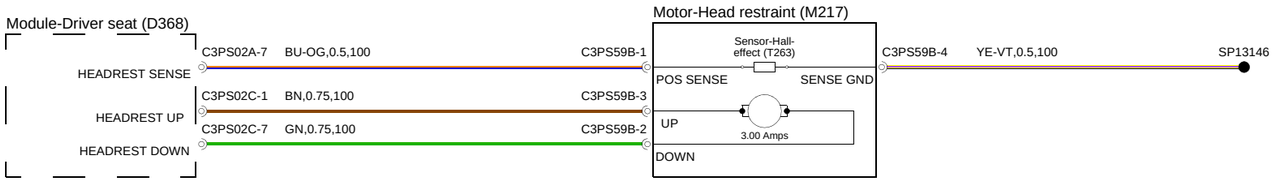
Module-Driver seat (D368)
HEADREST SENSE
HEADREST UP
HEADREST DOWN
C3PS02A-7
BU-OG,0.5,100
C3PS59B-1
C3PS02C-1
BN,0.75,100
C3PS59B-3
C3PS02C-7
GN,0.75,100
C3PS59B-2
Motor-Head restraint (M217)
Sensor-Hall-
effect (T263)
POS SENSE
SENSE GND
UP
3.00 Amps
DOWN
C3PS59B-4
YE-VT,0.5,100
SP13146

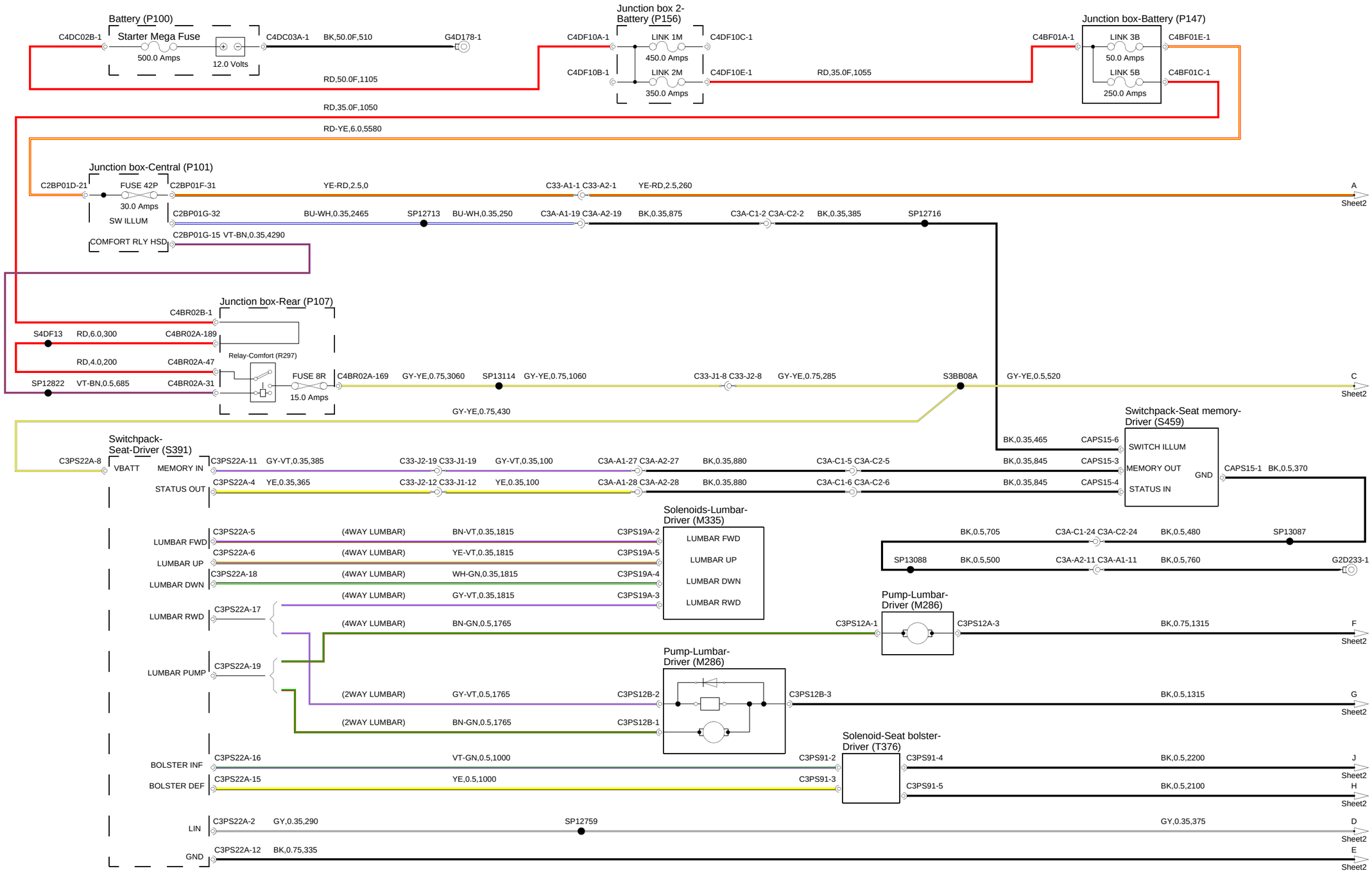
Battery (P100)
C4DC02B-1
Starter Mega Fuse
500.0 Amps
12.0 Volts
C4DC03A-1
BK,50.0F,510
G4D178-1
RD,50.0F,1105
RD,35.0F,1050
RD-YE,6.0,5580
Junction box 2-Battery (P156)
C4DF10A-1
LINK 1M
450.0 Amps
C4DF10C-1
C4DF10B-1
LINK 2M
350.0 Amps
C4DF10E-1
RD,35.0F,1055
Junction box-Battery (P147)
C4BF01A-1
LINK 3B
50.0 Amps
C4BF01E-1
LINK 5B
250.0 Amps
C4BF01C-1
Junction box-Central (P101)
C2BP01D-21
FUSE 42P
30.0 Amps
C2BP01F-31
YE-RD,2.5,0
C33-A1-1 C33-A2-1
YE-RD,2.5,260
A
Sheet2
SW ILLUM
C2BP01G-32
BU-WH,0.35,2465
SP12713
BU-WH,0.35,250
C3A-A1-19 C3A-A2-19
BK,0.35,875
C3A-C1-2 C3A-C2-2
BK,0.35,385
SP12716
COMFORT RLY HSD
C2BP01G-15 VT-BN,0.35,4290
Junction box-Rear (P107)
C4BR02B-1
S4DF13
RD,6.0,300
C4BR02A-189
Relay-Comfort (R297)
RD,4.0,200
C4BR02A-47
SP12822
VT-BN,0.5,685
C4BR02A-31
FUSE 8R
15.0 Amps
C4BR02A-169
GY-YE,0.75,3060
SP13114
GY-YE,0.75,1060
C33-J1-8 C33-J2-8
GY-YE,0.75,285
S3BB08A
GY-YE,0.5,520
C
Sheet2
GY-YE,0.75,430
Switchpack-Seat memory-Driver (S459)
BK,0.35,465
CAPS15-6
SWITCH ILLUM
Switchpack-Seat-Driver (S391)
C3PS22A-8
VBATT
MEMORY IN
C3PS22A-11
GY-VT,0.35,385
C33-J2-19 C33-J1-19
GY-VT,0.35,100
C3A-A1-27 C3A-A2-27
BK,0.35,880
C3A-C1-5 C3A-C2-5
BK,0.35,845
CAPS15-3
MEMORY OUT
GND
CAPS15-1
BK,0.5,370
STATUS OUT
C3PS22A-4
YE,0.35,365
C33-J2-12 C33-J1-12
YE,0.35,100
C3A-A1-28 C3A-A2-28
BK,0.35,880
C3A-C1-6 C3A-C2-6
BK,0.35,845
CAPS15-4
STATUS IN
Solenoids-Lumbar-Driver (M335)
LUMBAR FWD
C3PS22A-5
(4WAY LUMBAR)
BN-VT,0.35,1815
C3PS19A-2
LUMBAR UP
C3PS22A-6
YE-VT,0.35,1815
C3PS19A-5
LUMBAR DWN
C3PS22A-18
WH-GN,0.35,1815
C3PS19A-4
GY-VT,0.35,1815
C3PS19A-3
BK,0.5,705
C3A-C1-24 C3A-C2-24
BK,0.5,480
SP13087
SP13088
BK,0.5,500
C3A-A2-11 C3A-A1-11
BK,0.5,760
G2D233-1
LUMBAR RWD
C3PS22A-17
BN-GN,0.5,1765
Pump-Lumbar-Driver (M286)
C3PS12A-1
C3PS12A-3
BK,0.75,1315
F
Sheet2
LUMBAR PUMP
C3PS22A-19
(2WAY LUMBAR)
GY-VT,0.5,1765
C3PS12B-2
C3PS12B-3
BK,0.5,1315
G
Sheet2
BN-GN,0.5,1765
C3PS12B-1
Solenoid-Seat bolster-Driver (T376)
BOLSTER INF
C3PS22A-16
VT-GN,0.5,1000
C3PS91-2
C3PS91-4
BK,0.5,2200
J
Sheet2
BOLSTER DEF
C3PS22A-15
YE,0.5,1000
C3PS91-3
C3PS91-5
BK,0.5,2100
H
Sheet2
LIN
C3PS22A-2
GY,0.35,290
SP12759
GY,0.35,375
D
Sheet2
GND
C3PS22A-12
BK,0.75,335
E
Sheet2

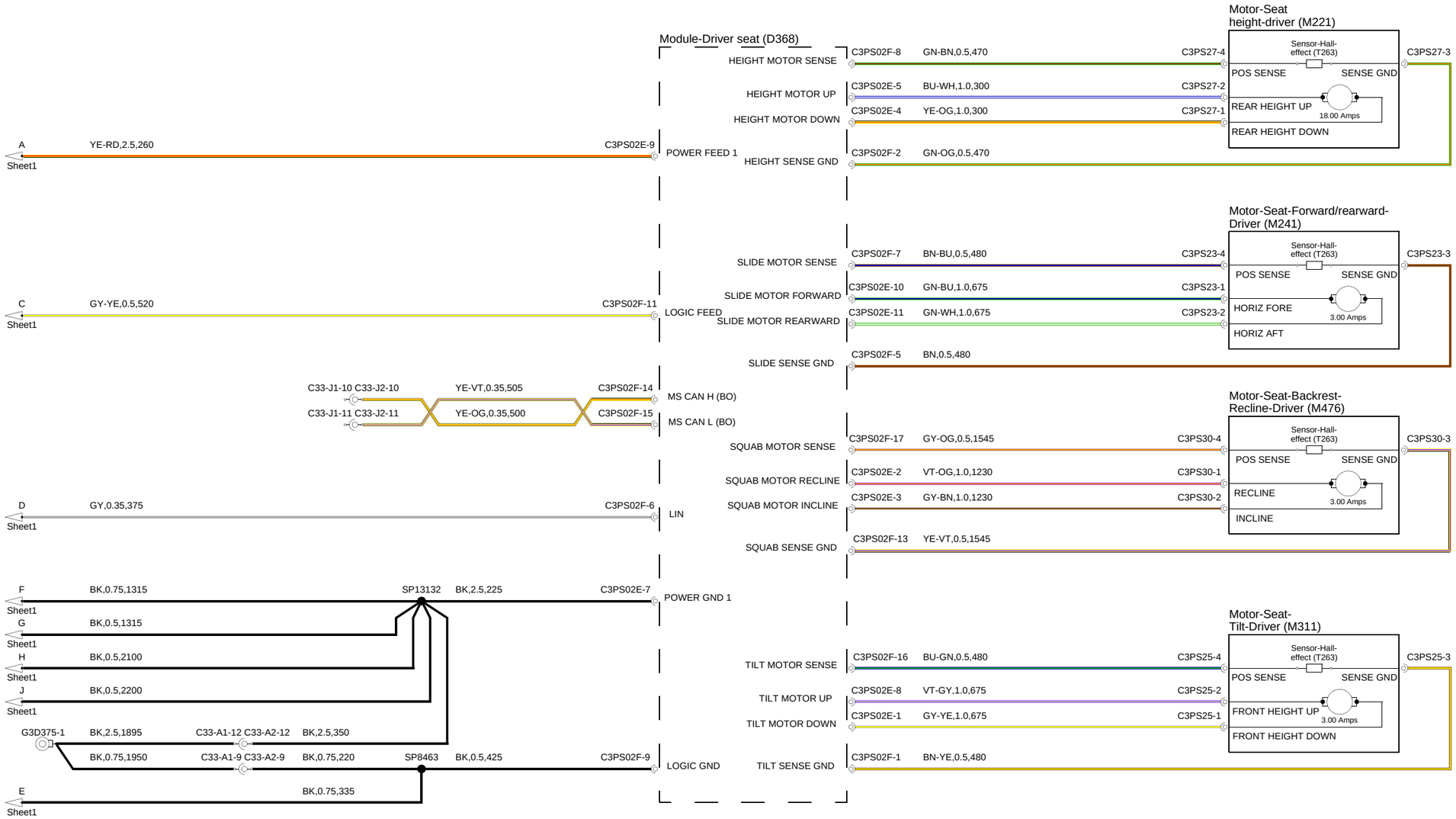
Module-Driver seat (D368)
Motor-Seat height-driver (M221)
Sensor-Hall-effect (T263)
POS SENSE
SENSE GND
REAR HEIGHT UP
18.00 Amps
REAR HEIGHT DOWN
HEIGHT MOTOR SENSE
HEIGHT MOTOR UP
HEIGHT MOTOR DOWN
HEIGHT SENSE GND
C3PS02F-8 GN-BN,0.5,470 C3PS27-4
C3PS27-3
C3PS02E-5 BU-WH,1.0,300 C3PS27-2
C3PS02E-4 YE-OG,1.0,300 C3PS27-1
C3PS02F-2 GN-OG,0.5,470
A YE-RD,2.5,260 C3PS02E-9
Sheet1
POWER FEED 1
Motor-Seat-Forward/rearward-Driver (M241)
HORIZ FORE
3.00 Amps
HORIZ AFT
SLIDE MOTOR SENSE
SLIDE MOTOR FORWARD
SLIDE MOTOR REARWARD
SLIDE SENSE GND
C3PS02F-7 BN-BU,0.5,480 C3PS23-4
C3PS23-3
C3PS02E-10 GN-BU,1.0,675 C3PS23-1
C3PS02E-11 GN-WH,1.0,675 C3PS23-2
C3PS02F-5 BN,0.5,480
C Sheet1 GY-YE,0.5,520 C3PS02F-11
LOGIC FEED
C33-J1-10 C33-J2-10 YE-VT,0.35,505 C3PS02F-14
C33-J1-11 C33-J2-11 YE-OG,0.35,500 C3PS02F-15
MS CAN H (BO)
MS CAN L (BO)
Motor-Seat-Backrest-Recline-Driver (M476)
RECLINE
3.00 Amps
INCLINE
SQUAB MOTOR SENSE
SQUAB MOTOR RECLINE
SQUAB MOTOR INCLINE
SQUAB SENSE GND
C3PS02F-17 GY-OG,0.5,1545 C3PS30-4
C3PS30-3
C3PS02E-2 VT-OG,1.0,1230 C3PS30-1
C3PS02E-3 GY-BN,1.0,1230 C3PS30-2
C3PS02F-13 YE-VT,0.5,1545
D Sheet1 GY,0.35,375 C3PS02F-6
LIN
F Sheet1 BK,0.75,1315 SP13132 BK,2.5,225 C3PS02E-7
POWER GND 1
G Sheet1 BK,0.5,1315
H Sheet1 BK,0.5,2100
J Sheet1 BK,0.5,2200
G3D375-1 BK,2.5,1895 C33-A1-12 C33-A2-12 BK,2.5,350
BK,0.75,1950 C33-A1-9 C33-A2-9 BK,0.75,220 SP8463 BK,0.5,425 C3PS02F-9
LOGIC GND
E Sheet1 BK,0.75,335
Motor-Seat-Tilt-Driver (M311)
FRONT HEIGHT UP
3.00 Amps
FRONT HEIGHT DOWN
TILT MOTOR SENSE
TILT MOTOR UP
TILT MOTOR DOWN
TILT SENSE GND
C3PS02F-16 BU-GN,0.5,480 C3PS25-4
C3PS25-3
C3PS02E-8 VT-GY,1.0,675 C3PS25-2
C3PS02E-1 GY-YE,1.0,675 C3PS25-1
C3PS02F-1 BN-YE,0.5,480

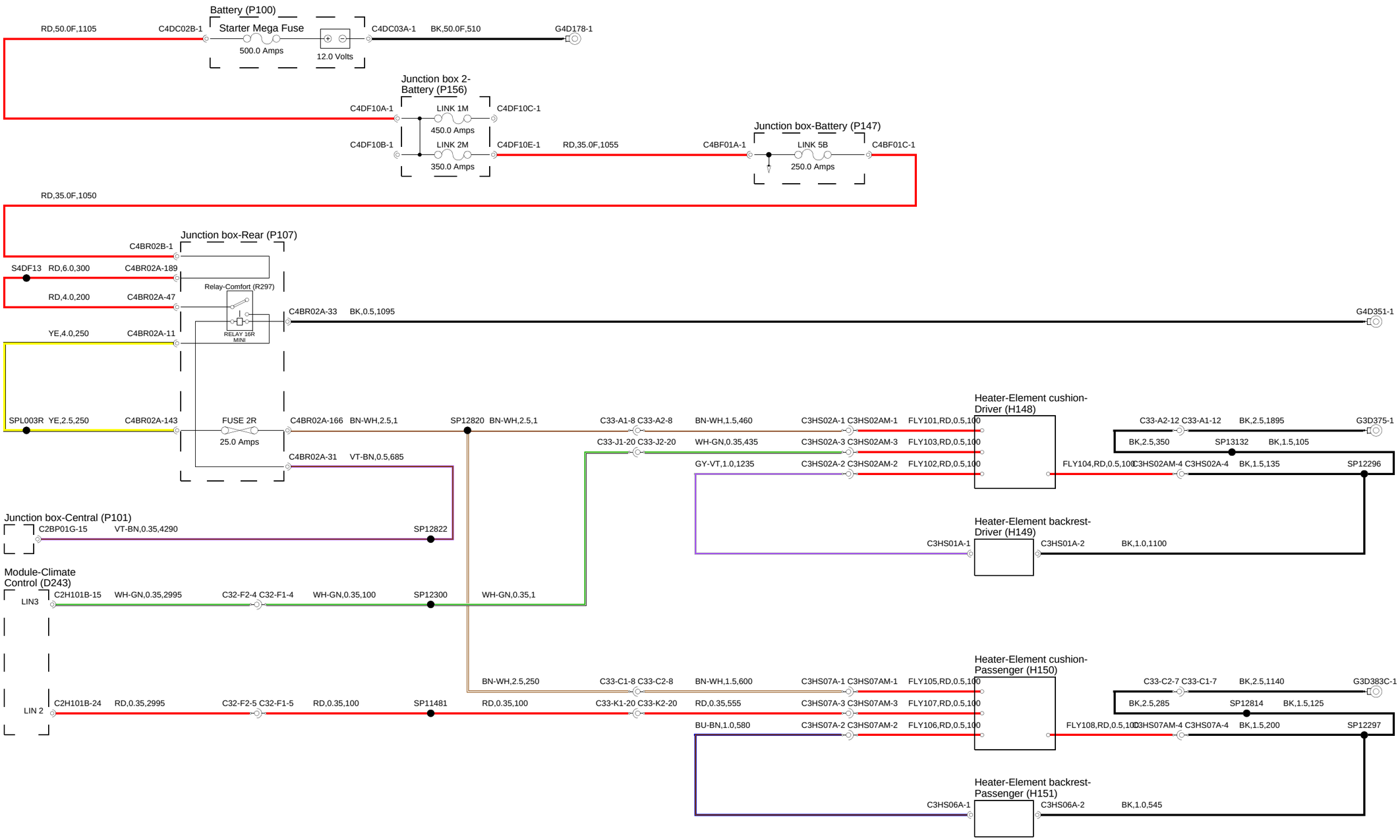
Battery (P100)
Starter Mega Fuse
500.0 Amps
12.0 Volts
RD,50.0F,1105
C4DC02B-1
C4DC03A-1
BK,50.0F,510
G4D178-1
Junction box 2-Battery (P156)
C4DF10A-1
LINK 1M
450.0 Amps
C4DF10C-1
C4DF10B-1
LINK 2M
350.0 Amps
C4DF10E-1
RD,35.0F,1055
Junction box-Battery (P147)
C4BF01A-1
LINK 5B
250.0 Amps
C4BF01C-1
RD,35.0F,1050
Junction box-Rear (P107)
C4BR02B-1
S4DF13
RD,6.0,300
C4BR02A-189
Relay-Comfort (R297)
RD,4.0,200
C4BR02A-47
RELAY 16R MINI
C4BR02A-33
BK,0.5,1095
G4D351-1
YE,4.0,250
C4BR02A-11
SPL003R
YE,2.5,250
C4BR02A-143
FUSE 2R
25.0 Amps
C4BR02A-166
BN-WH,2.5,1
SP12820
BN-WH,2.5,1
C33-A1-8
C33-A2-8
BN-WH,1.5,460
C3HS02A-1
C3HS02AM-1
FLY101,RD,0.5,100
Heater-Element cushion-Driver (H148)
C33-A2-12
C33-A1-12
BK,2.5,1895
G3D375-1
C33-J1-20
C33-J2-20
WH-GN,0.35,435
C3HS02A-3
C3HS02AM-3
FLY103,RD,0.5,100
BK,2.5,350
SP13132
BK,1.5,105
C4BR02A-31
VT-BN,0.5,685
GY-VT,1.0,1235
C3HS02A-2
C3HS02AM-2
FLY102,RD,0.5,100
FLY104,RD,0.5,100
C3HS02AM-4
C3HS02A-4
BK,1.5,135
SP12296
Junction box-Central (P101)
C2BP01G-15
VT-BN,0.35,4290
SP12822
Heater-Element backrest-Driver (H149)
C3HS01A-1
C3HS01A-2
BK,1.0,1100
Module-Climate Control (D243)
LIN3
C2H101B-15
WH-GN,0.35,2995
C32-F2-4
C32-F1-4
WH-GN,0.35,100
SP12300
WH-GN,0.35,1
BN-WH,2.5,250
C33-C1-8
C33-C2-8
BN-WH,1.5,600
C3HS07A-1
C3HS07AM-1
FLY105,RD,0.5,100
Heater-Element cushion-Passenger (H150)
C33-C2-7
C33-C1-7
BK,2.5,1140
G3D383C-1
LIN 2
C2H101B-24
RD,0.35,2995
C32-F2-5
C32-F1-5
RD,0.35,100
SP11481
RD,0.35,100
C33-K1-20
C33-K2-20
RD,0.35,555
C3HS07A-3
C3HS07AM-3
FLY107,RD,0.5,100
BK,2.5,285
SP12814
BK,1.5,125
BU-BN,1.0,580
C3HS07A-2
C3HS07AM-2
FLY106,RD,0.5,100
FLY108,RD,0.5,100
C3HS07AM-4
C3HS07A-4
BK,1.5,200
SP12297
Heater-Element backrest-Passenger (H151)
C3HS06A-1
C3HS06A-2
BK,1.0,545

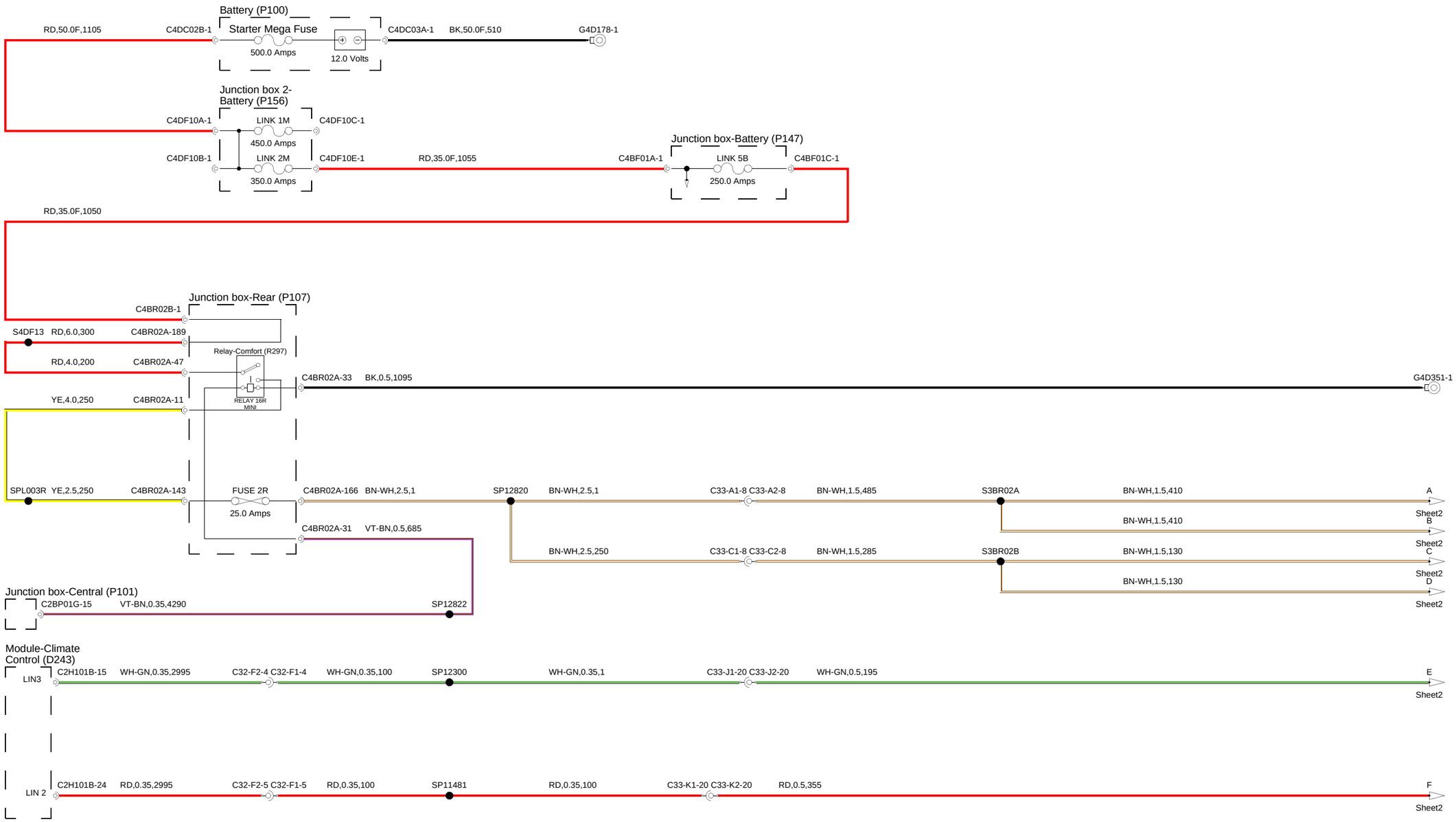
Battery (P100)
Starter Mega Fuse
500.0 Amps
12.0 Volts
RD,50.0F,1105
C4DC02B-1
C4DC03A-1
BK,50.0F,510
G4D178-1
Junction box 2-
Battery (P156)
C4DF10A-1
LINK 1M
450.0 Amps
C4DF10C-1
C4DF10B-1
LINK 2M
350.0 Amps
C4DF10E-1
RD,35.0F,1055
Junction box-Battery (P147)
C4BF01A-1
LINK 5B
250.0 Amps
C4BF01C-1
RD,35.0F,1050
Junction box-Rear (P107)
C4BR02B-1
S4DF13
RD,6.0,300
C4BR02A-189
Relay-Comfort (R297)
RD,4.0,200
C4BR02A-47
RELAY 16R
MINI
C4BR02A-33
BK,0.5,1095
G4D351-1
YE,4.0,250
C4BR02A-11
SPL003R
YE,2.5,250
C4BR02A-143
FUSE 2R
25.0 Amps
C4BR02A-166
BN-WH,2.5,1
SP12820
BN-WH,2.5,1
C33-A1-8 C33-A2-8
BN-WH,1.5,485
S3BR02A
BN-WH,1.5,410
A
Sheet2
BN-WH,1.5,410
B
Sheet2
C4BR02A-31
VT-BN,0.5,685
BN-WH,2.5,250
C33-C1-8 C33-C2-8
BN-WH,1.5,285
S3BR02B
BN-WH,1.5,130
C
Sheet2
BN-WH,1.5,130
D
Sheet2
Junction box-Central (P101)
C2BP01G-15
VT-BN,0.35,4290
SP12822
Module-Climate
Control (D243)
LIN3
C2H101B-15
WH-GN,0.35,2995
C32-F2-4 C32-F1-4
WH-GN,0.35,100
SP12300
WH-GN,0.35,1
C33-J1-20 C33-J2-20
WH-GN,0.5,195
E
Sheet2
LIN 2
C2H101B-24
RD,0.35,2995
C32-F2-5 C32-F1-5
RD,0.35,100
SP11481
RD,0.35,100
C33-K1-20 C33-K2-20
RD,0.5,355
F
Sheet2

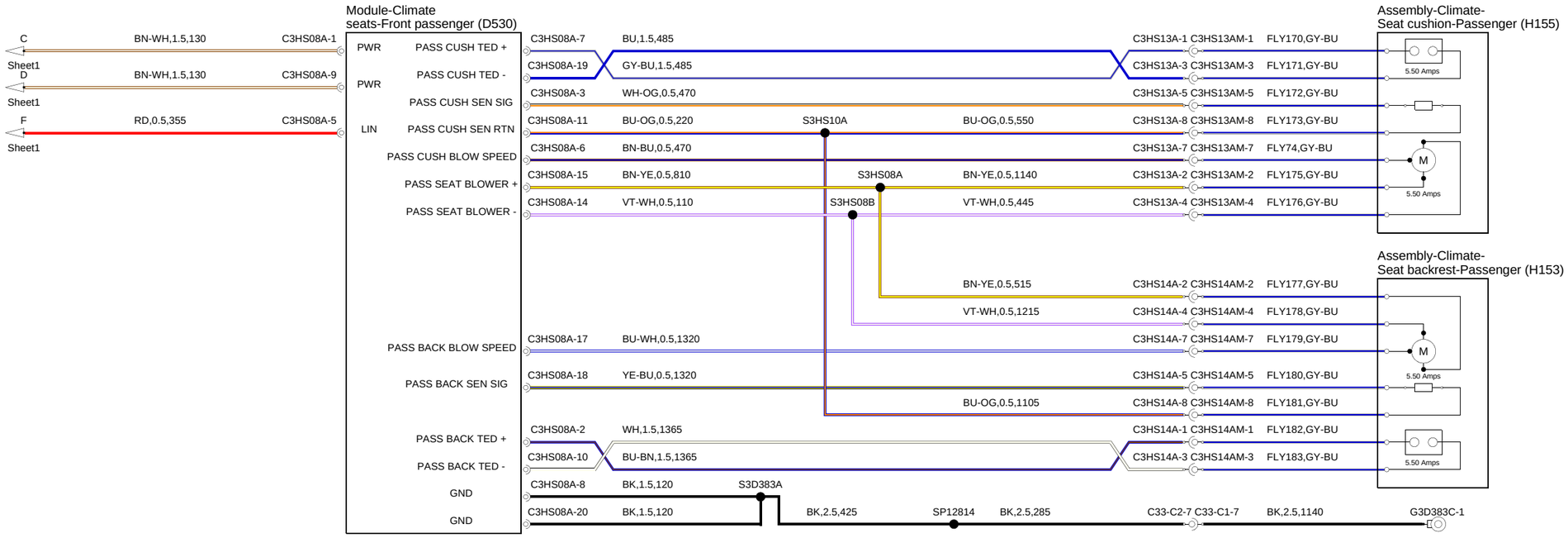
Module-Climate
seats-Front passenger (D530)
C
Sheet1
BN-WH,1.5,130
C3HS08A-1
D
Sheet1
BN-WH,1.5,130
C3HS08A-9
F
Sheet1
RD,0.5,355
C3HS08A-5
PWR
PASS CUSH TED +
PWR
PASS CUSH TED -
PASS CUSH SEN SIG
LIN
PASS CUSH SEN RTN
PASS CUSH BLOW SPEED
PASS SEAT BLOWER +
PASS SEAT BLOWER -
PASS BACK BLOW SPEED
PASS BACK SEN SIG
PASS BACK TED +
PASS BACK TED -
GND
GND
C3HS08A-7
BU,1.5,485
C3HS08A-19
GY-BU,1.5,485
C3HS08A-3
WH-OG,0.5,470
C3HS08A-11
BU-OG,0.5,220
S3HS10A
BU-OG,0.5,550
C3HS08A-6
BN-BU,0.5,470
C3HS08A-15
BN-YE,0.5,810
S3HS08A
BN-YE,0.5,1140
C3HS08A-14
VT-WH,0.5,110
S3HS08B
VT-WH,0.5,445
C3HS08A-17
BU-WH,0.5,1320
C3HS08A-18
YE-BU,0.5,1320
C3HS08A-2
WH,1.5,1365
C3HS08A-10
BU-BN,1.5,1365
C3HS08A-8
BK,1.5,120
S3D383A
C3HS08A-20
BK,1.5,120
BK,2.5,425
SP12814
BK,2.5,285
C33-C2-7
C33-C1-7
BK,2.5,1140
G3D383C-1
C3HS13A-1
C3HS13AM-1
FLY170,GY-BU
C3HS13A-3
C3HS13AM-3
FLY171,GY-BU
C3HS13A-5
C3HS13AM-5
FLY172,GY-BU
C3HS13A-8
C3HS13AM-8
FLY173,GY-BU
C3HS13A-7
C3HS13AM-7
FLY74,GY-BU
C3HS13A-2
C3HS13AM-2
FLY175,GY-BU
C3HS13A-4
C3HS13AM-4
FLY176,GY-BU
Assembly-Climate-
Seat cushion-Passenger (H155)
5.50 Amps
M
5.50 Amps
BN-YE,0.5,515
C3HS14A-2
C3HS14AM-2
FLY177,GY-BU
VT-WH,0.5,1215
C3HS14A-4
C3HS14AM-4
FLY178,GY-BU
C3HS14A-7
C3HS14AM-7
FLY179,GY-BU
C3HS14A-5
C3HS14AM-5
FLY180,GY-BU
BU-OG,0.5,1105
C3HS14A-8
C3HS14AM-8
FLY181,GY-BU
C3HS14A-1
C3HS14AM-1
FLY182,GY-BU
C3HS14A-3
C3HS14AM-3
FLY183,GY-BU
Assembly-Climate-
Seat backrest-Passenger (H153)
M
5.50 Amps
5.50 Amps
5.50 Amps

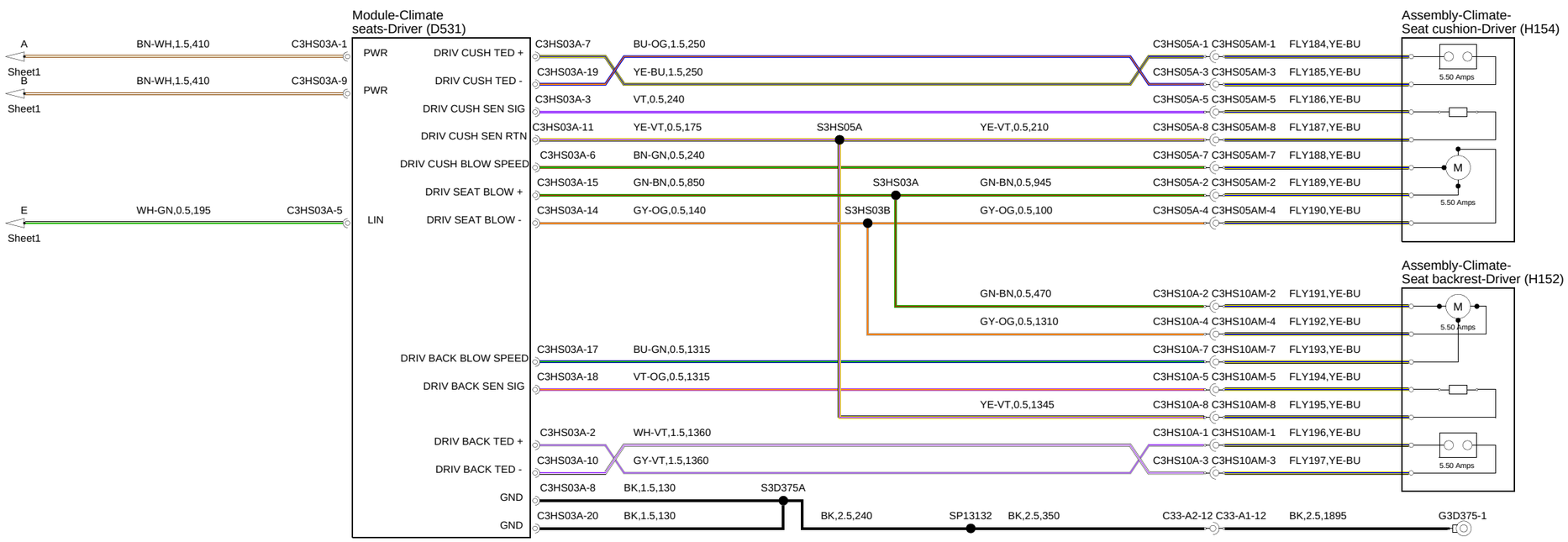
Module-Climate
seats-Driver (D531)
A
Sheet1
BN-WH,1.5,410
C3HS03A-1
B
Sheet1
BN-WH,1.5,410
C3HS03A-9
E
Sheet1
WH-GN,0.5,195
C3HS03A-5
PWR
DRIV CUSH TED +
PWR
DRIV CUSH TED -
DRIV CUSH SEN SIG
DRIV CUSH SEN RTN
DRIV CUSH BLOW SPEED
DRIV SEAT BLOW +
LIN
DRIV SEAT BLOW -
DRIV BACK BLOW SPEED
DRIV BACK SEN SIG
DRIV BACK TED +
DRIV BACK TED -
GND
GND
C3HS03A-7
BU-OG,1.5,250
C3HS03A-19
YE-BU,1.5,250
C3HS03A-3
VT,0.5,240
C3HS03A-11
YE-VT,0.5,175
S3HS05A
YE-VT,0.5,210
C3HS03A-6
BN-GN,0.5,240
C3HS03A-15
GN-BN,0.5,850
S3HS03A
GN-BN,0.5,945
C3HS03A-14
GY-OG,0.5,140
S3HS03B
GY-OG,0.5,100
C3HS03A-17
BU-GN,0.5,1315
C3HS03A-18
VT-OG,0.5,1315
C3HS03A-2
WH-VT,1.5,1360
C3HS03A-10
GY-VT,1.5,1360
C3HS03A-8
BK,1.5,130
S3D375A
C3HS03A-20
BK,1.5,130
BK,2.5,240
SP13132
BK,2.5,350
C33-A2-12
C33-A1-12
BK,2.5,1895
G3D375-1
C3HS05A-1
C3HS05AM-1
FLY184,YE-BU
C3HS05A-3
C3HS05AM-3
FLY185,YE-BU
C3HS05A-5
C3HS05AM-5
FLY186,YE-BU
C3HS05A-8
C3HS05AM-8
FLY187,YE-BU
C3HS05A-7
C3HS05AM-7
FLY188,YE-BU
C3HS05A-2
C3HS05AM-2
FLY189,YE-BU
C3HS05A-4
C3HS05AM-4
FLY190,YE-BU
Assembly-Climate-
Seat cushion-Driver (H154)
5.50 Amps
M
5.50 Amps
GN-BN,0.5,470
C3HS10A-2
C3HS10AM-2
FLY191,YE-BU
GY-OG,0.5,1310
C3HS10A-4
C3HS10AM-4
FLY192,YE-BU
C3HS10A-7
C3HS10AM-7
FLY193,YE-BU
C3HS10A-5
C3HS10AM-5
FLY194,YE-BU
YE-VT,0.5,1345
C3HS10A-8
C3HS10AM-8
FLY195,YE-BU
C3HS10A-1
C3HS10AM-1
FLY196,YE-BU
C3HS10A-3
C3HS10AM-3
FLY197,YE-BU
Assembly-Climate-
Seat backrest-Driver (H152)
M
5.50 Amps
5.50 Amps
5.50 Amps

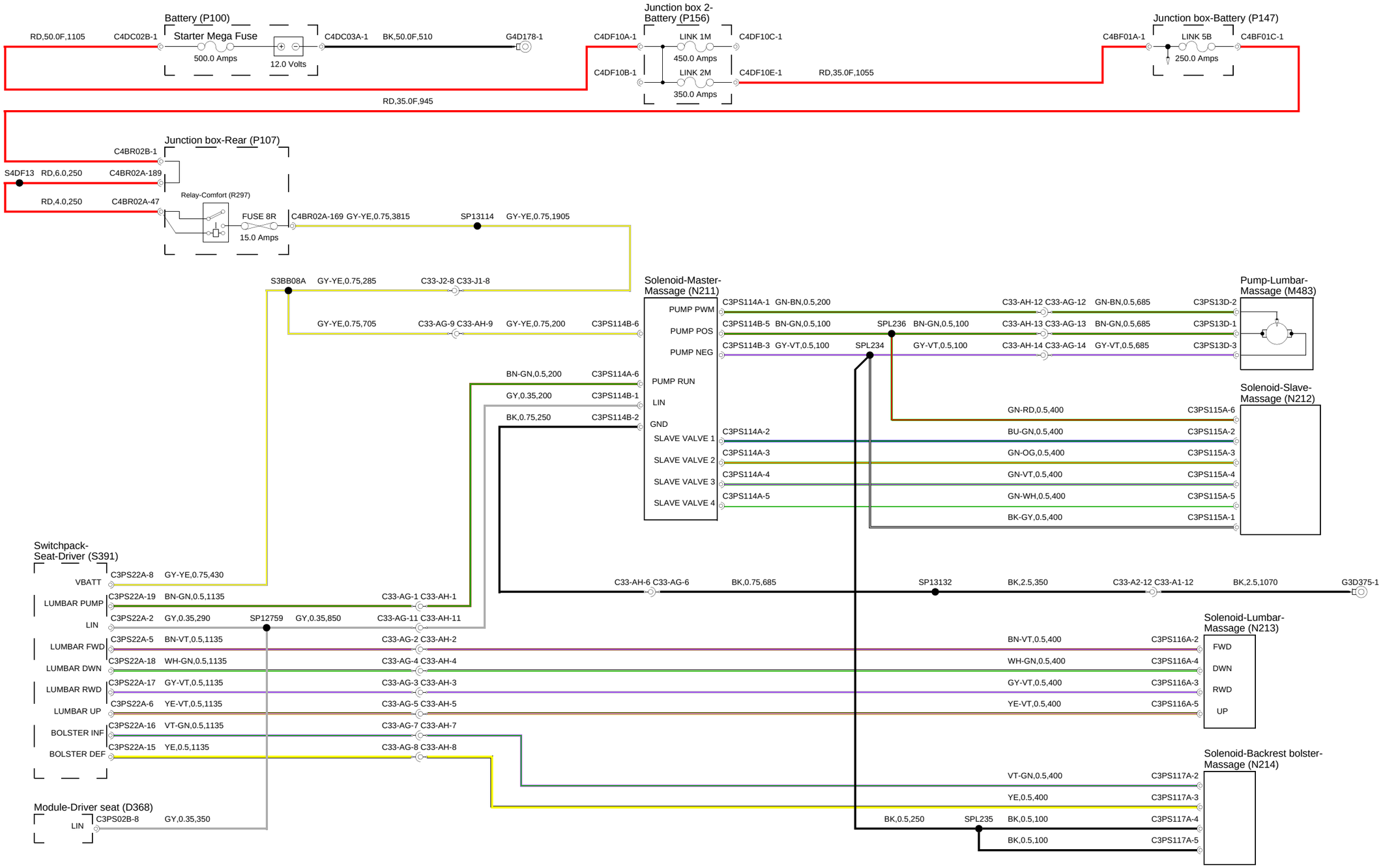
Battery (P100)
Starter Mega Fuse
500.0 Amps
12.0 Volts
RD,50.0F,1105
C4DC02B-1
C4DC03A-1
BK,50.0F,510
G4D178-1
RD,35.0F,945
Junction box 2-Battery (P156)
C4DF10A-1
LINK 1M
450.0 Amps
C4DF10C-1
C4DF10B-1
LINK 2M
350.0 Amps
C4DF10E-1
RD,35.0F,1055
Junction box-Battery (P147)
C4BF01A-1
LINK 5B
250.0 Amps
C4BF01C-1
Junction box-Rear (P107)
C4BR02B-1
S4DF13
RD,6.0,250
C4BR02A-189
RD,4.0,250
C4BR02A-47
Relay-Comfort (R297)
FUSE 8R
15.0 Amps
C4BR02A-169
GY-YE,0.75,3815
SP13114
GY-YE,0.75,1905
S3BB08A
GY-YE,0.75,285
C33-J2-8
C33-J1-8
GY-YE,0.75,705
C33-AG-9
C33-AH-9
GY-YE,0.75,200
C3PS114B-6
Solenoid-Master-Massage (N211)
PUMP PWM
PUMP POS
PUMP NEG
PUMP RUN
LIN
GND
SLAVE VALVE 1
SLAVE VALVE 2
SLAVE VALVE 3
SLAVE VALVE 4
C3PS114A-1
GN-BN,0.5,200
C33-AH-12
C33-AG-12
GN-BN,0.5,685
C3PS13D-2
C3PS114B-5
BN-GN,0.5,100
SPL236
BN-GN,0.5,100
C33-AH-13
C33-AG-13
BN-GN,0.5,685
C3PS13D-1
C3PS114B-3
GY-VT,0.5,100
SPL234
GY-VT,0.5,100
C33-AH-14
C33-AG-14
GY-VT,0.5,685
C3PS13D-3
Pump-Lumbar-Massage (M483)
BN-GN,0.5,200
C3PS114A-6
GY,0.35,200
C3PS114B-1
BK,0.75,250
C3PS114B-2
Solenoid-Slave-Massage (N212)
GN-RD,0.5,400
C3PS115A-6
C3PS114A-2
BU-GN,0.5,400
C3PS115A-2
C3PS114A-3
GN-OG,0.5,400
C3PS115A-3
C3PS114A-4
GN-VT,0.5,400
C3PS115A-4
C3PS114A-5
GN-WH,0.5,400
C3PS115A-5
BK-GY,0.5,400
C3PS115A-1
Switchpack-Seat-Driver (S391)
VBATT
C3PS22A-8
GY-YE,0.75,430
LUMBAR PUMP
C3PS22A-19
BN-GN,0.5,1135
C33-AG-1
C33-AH-1
LIN
C3PS22A-2
GY,0.35,290
SP12759
GY,0.35,850
C33-AG-11
C33-AH-11
LUMBAR FWD
C3PS22A-5
BN-VT,0.5,1135
C33-AG-2
C33-AH-2
LUMBAR DWN
C3PS22A-18
WH-GN,0.5,1135
C33-AG-4
C33-AH-4
LUMBAR RWD
C3PS22A-17
GY-VT,0.5,1135
C33-AG-3
C33-AH-3
LUMBAR UP
C3PS22A-6
YE-VT,0.5,1135
C33-AG-5
C33-AH-5
BOLSTER INF
C3PS22A-16
VT-GN,0.5,1135
C33-AG-7
C33-AH-7
BOLSTER DEF
C3PS22A-15
YE,0.5,1135
C33-AG-8
C33-AH-8
Module-Driver seat (D368)
LIN
C3PS02B-8
GY,0.35,350
C33-AH-6
C33-AG-6
BK,0.75,685
SP13132
BK,2.5,350
C33-A2-12
C33-A1-12
BK,2.5,1070
G3D375-1
Solenoid-Lumbar-Massage (N213)
FWD
DWN
RWD
UP
BN-VT,0.5,400
C3PS116A-2
WH-GN,0.5,400
C3PS116A-4
GY-VT,0.5,400
C3PS116A-3
YE-VT,0.5,400
C3PS116A-5
Solenoid-Backrest bolster-Massage (N214)
VT-GN,0.5,400
C3PS117A-2
YE,0.5,400
C3PS117A-3
BK,0.5,250
SPL235
BK,0.5,100
C3PS117A-4
BK,0.5,100
C3PS117A-5

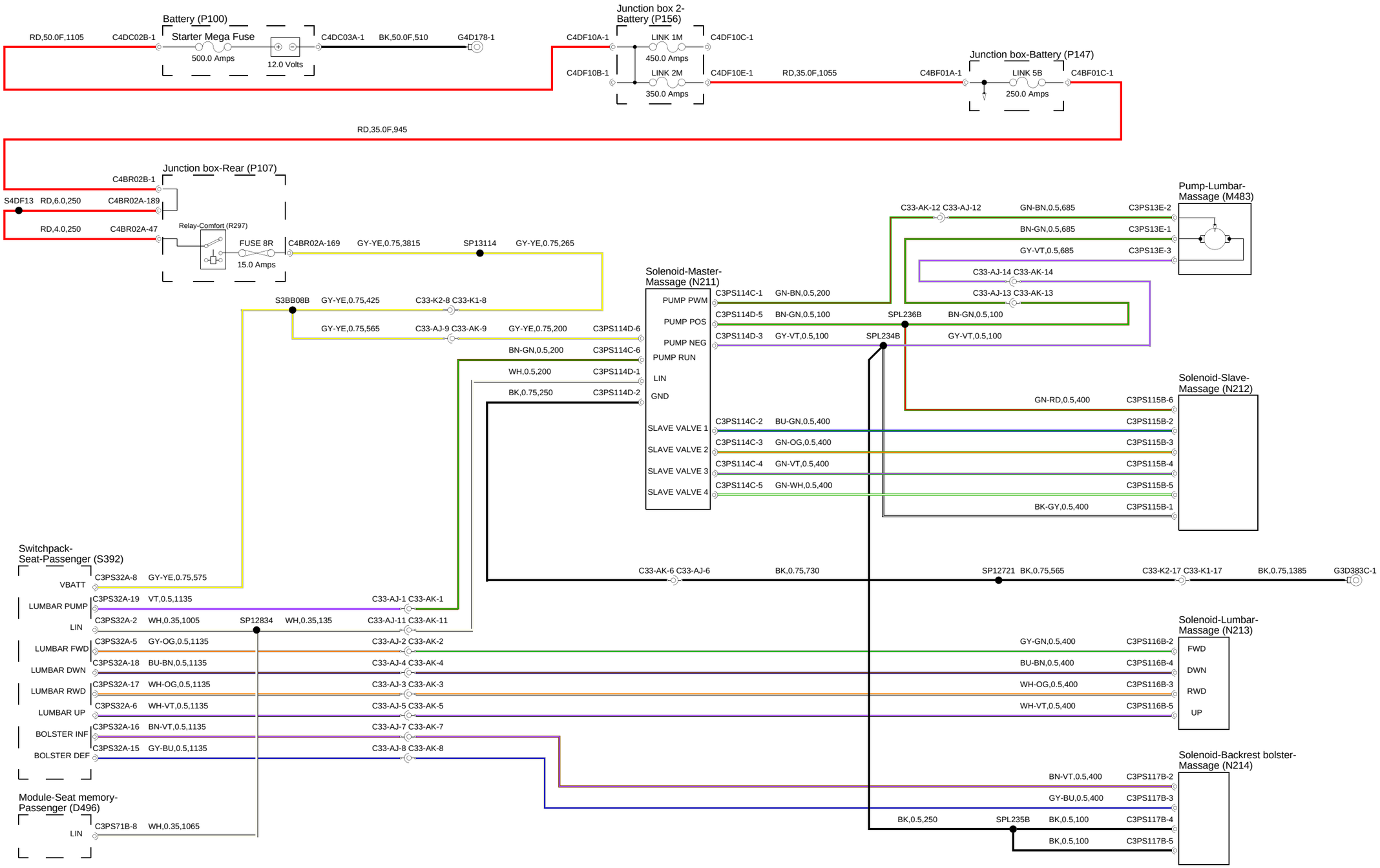
Battery (P100)
Starter Mega Fuse
500.0 Amps
12.0 Volts
RD,50.0F,1105
C4DC02B-1
C4DC03A-1
BK,50.0F,510
G4D178-1
Junction box 2-Battery (P156)
C4DF10A-1
LINK 1M
450.0 Amps
C4DF10C-1
C4DF10B-1
LINK 2M
350.0 Amps
C4DF10E-1
RD,35.0F,1055
Junction box-Battery (P147)
C4BF01A-1
LINK 5B
250.0 Amps
C4BF01C-1
RD,35.0F,945
Junction box-Rear (P107)
C4BR02B-1
S4DF13
RD,6.0,250
C4BR02A-189
RD,4.0,250
C4BR02A-47
Relay-Comfort (R297)
FUSE 8R
15.0 Amps
C4BR02A-169
GY-YE,0.75,3815
SP13114
GY-YE,0.75,265
S3BB08B
GY-YE,0.75,425
C33-K2-8 C33-K1-8
GY-YE,0.75,565
C33-AJ-9 C33-AK-9
GY-YE,0.75,200
C3PS114D-6
BN-GN,0.5,200
C3PS114C-6
WH,0.5,200
C3PS114D-1
BK,0.75,250
C3PS114D-2
Solenoid-Master-Massage (N211)
PUMP PWM
PUMP POS
PUMP NEG
PUMP RUN
LIN
GND
SLAVE VALVE 1
SLAVE VALVE 2
SLAVE VALVE 3
SLAVE VALVE 4
C3PS114C-1
GN-BN,0.5,200
C3PS114D-5
BN-GN,0.5,100
C3PS114D-3
GY-VT,0.5,100
C3PS114C-2
BU-GN,0.5,400
C3PS114C-3
GN-OG,0.5,400
C3PS114C-4
GN-VT,0.5,400
C3PS114C-5
GN-WH,0.5,400
SPL236B
BN-GN,0.5,100
SPL234B
GY-VT,0.5,100
Pump-Lumbar-Massage (M483)
C33-AK-12 C33-AJ-12
GN-BN,0.5,685
C3PS13E-2
BN-GN,0.5,685
C3PS13E-1
GY-VT,0.5,685
C3PS13E-3
C33-AJ-14 C33-AK-14
C33-AJ-13 C33-AK-13
Solenoid-Slave-Massage (N212)
GN-RD,0.5,400
C3PS115B-6
C3PS115B-2
C3PS115B-3
C3PS115B-4
C3PS115B-5
BK-GY,0.5,400
C3PS115B-1
Switchpack-Seat-Passenger (S392)
VBATT
C3PS32A-8
GY-YE,0.75,575
LUMBAR PUMP
C3PS32A-19
VT,0.5,1135
C33-AJ-1 C33-AK-1
LIN
C3PS32A-2
WH,0.35,1005
SP12834
WH,0.35,135
C33-AJ-11 C33-AK-11
LUMBAR FWD
C3PS32A-5
GY-OG,0.5,1135
C33-AJ-2 C33-AK-2
LUMBAR DWN
C3PS32A-18
BU-BN,0.5,1135
C33-AJ-4 C33-AK-4
LUMBAR RWD
C3PS32A-17
WH-OG,0.5,1135
C33-AJ-3 C33-AK-3
LUMBAR UP
C3PS32A-6
WH-VT,0.5,1135
C33-AJ-5 C33-AK-5
BOLSTER INF
C3PS32A-16
BN-VT,0.5,1135
C33-AJ-7 C33-AK-7
BOLSTER DEF
C3PS32A-15
GY-BU,0.5,1135
C33-AJ-8 C33-AK-8
Module-Seat memory-Passenger (D496)
LIN
C3PS71B-8
WH,0.35,1065
C33-AK-6 C33-AJ-6
BK,0.75,730
SP12721
BK,0.75,565
C33-K2-17 C33-K1-17
BK,0.75,1385
G3D383C-1
Solenoid-Lumbar-Massage (N213)
FWD
DWN
RWD
UP
GY-GN,0.5,400
C3PS116B-2
BU-BN,0.5,400
C3PS116B-4
WH-OG,0.5,400
C3PS116B-3
WH-VT,0.5,400
C3PS116B-5
Solenoid-Backrest bolster-Massage (N214)
BN-VT,0.5,400
C3PS117B-2
GY-BU,0.5,400
C3PS117B-3
BK,0.5,250
SPL235B
BK,0.5,100
C3PS117B-4
BK,0.5,100
C3PS117B-5

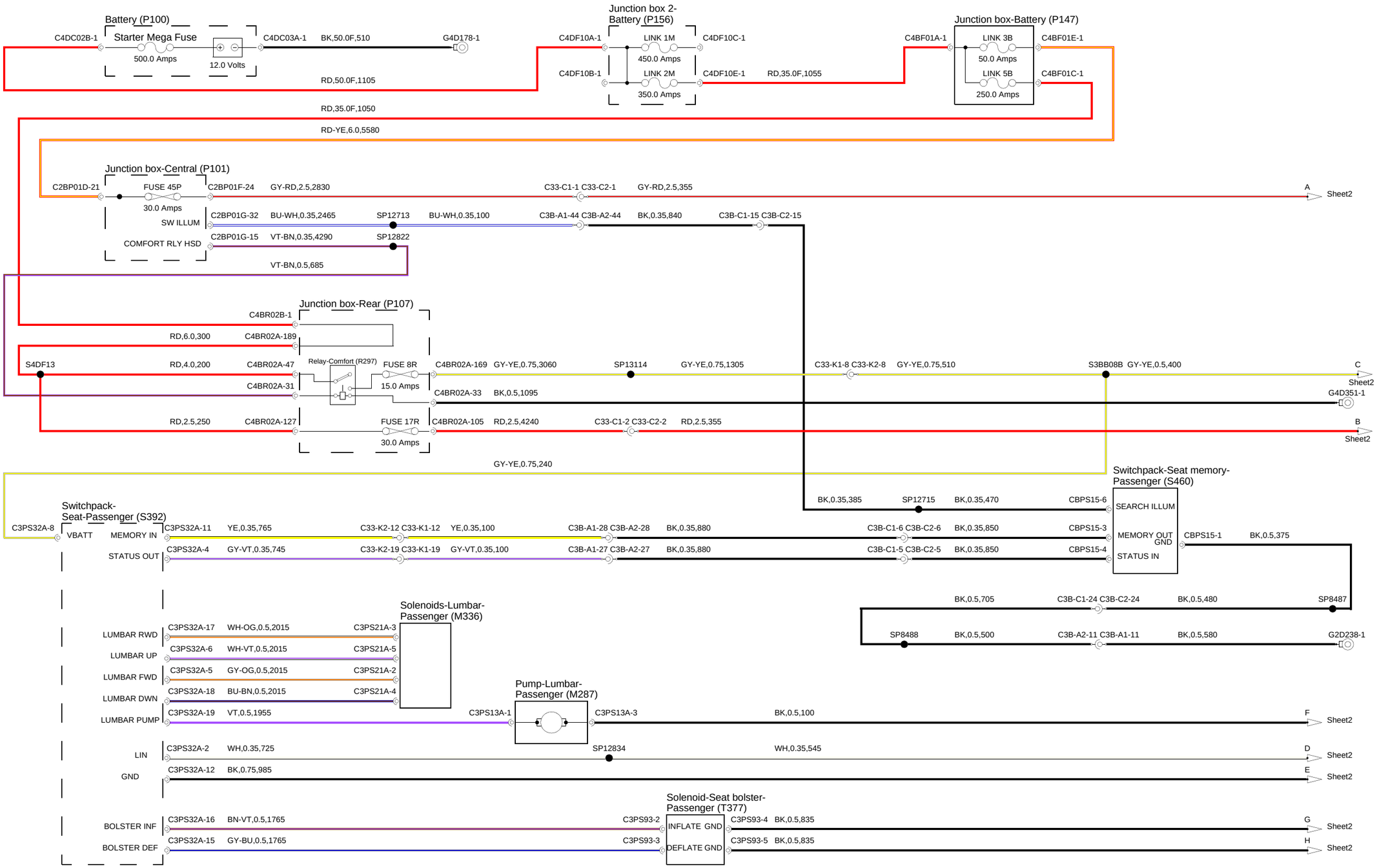
Battery (P100)
C4DC02B-1
Starter Mega Fuse
500.0 Amps
12.0 Volts
C4DC03A-1
BK,50.0F,510
G4D178-1
RD,50.0F,1105
RD,35.0F,1050
RD-YE,6.0,5580
Junction box 2-Battery (P156)
C4DF10A-1
LINK 1M
450.0 Amps
C4DF10C-1
C4DF10B-1
LINK 2M
350.0 Amps
C4DF10E-1
RD,35.0F,1055
Junction box-Battery (P147)
C4BF01A-1
LINK 3B
50.0 Amps
C4BF01E-1
LINK 5B
250.0 Amps
C4BF01C-1
Junction box-Central (P101)
C2BP01D-21
FUSE 45P
30.0 Amps
C2BP01F-24
GY-RD,2.5,2830
C33-C1-1 C33-C2-1
GY-RD,2.5,355
A
Sheet2
SW ILLUM
C2BP01G-32
BU-WH,0.35,2465
SP12713
BU-WH,0.35,100
C3B-A1-44 C3B-A2-44
BK,0.35,840
C3B-C1-15 C3B-C2-15
COMFORT RLY HSD
C2BP01G-15
VT-BN,0.35,4290
SP12822
VT-BN,0.5,685
Junction box-Rear (P107)
C4BR02B-1
RD,6.0,300
C4BR02A-189
S4DF13
RD,4.0,200
C4BR02A-47
Relay-Comfort (R297)
FUSE 8R
C4BR02A-169
GY-YE,0.75,3060
SP13114
GY-YE,0.75,1305
C33-K1-8 C33-K2-8
GY-YE,0.75,510
S3BB08B
GY-YE,0.5,400
C
Sheet2
C4BR02A-31
15.0 Amps
C4BR02A-33
BK,0.5,1095
G4D351-1
RD,2.5,250
C4BR02A-127
FUSE 17R
C4BR02A-105
RD,2.5,4240
C33-C1-2 C33-C2-2
RD,2.5,355
B
Sheet2
30.0 Amps
GY-YE,0.75,240
Switchpack-Seat memory-Passenger (S460)
BK,0.35,385
SP12715
BK,0.35,470
CBPS15-6
SEARCH ILLUM
Switchpack-Seat-Passenger (S392)
C3PS32A-8
VBATT
MEMORY IN
C3PS32A-11
YE,0.35,765
C33-K2-12 C33-K1-12
YE,0.35,100
C3B-A1-28 C3B-A2-28
BK,0.35,880
C3B-C1-6 C3B-C2-6
BK,0.35,850
CBPS15-3
MEMORY OUT
GND
CBPS15-1
BK,0.5,375
STATUS OUT
C3PS32A-4
GY-VT,0.35,745
C33-K2-19 C33-K1-19
GY-VT,0.35,100
C3B-A1-27 C3B-A2-27
BK,0.35,880
C3B-C1-5 C3B-C2-5
BK,0.35,850
CBPS15-4
STATUS IN
BK,0.5,705
C3B-C1-24 C3B-C2-24
BK,0.5,480
SP8487
Solenoids-Lumbar-Passenger (M336)
LUMBAR RWD
C3PS32A-17
WH-OG,0.5,2015
C3PS21A-3
SP8488
BK,0.5,500
C3B-A2-11 C3B-A1-11
BK,0.5,580
G2D238-1
LUMBAR UP
C3PS32A-6
WH-VT,0.5,2015
C3PS21A-5
LUMBAR FWD
C3PS32A-5
GY-OG,0.5,2015
C3PS21A-2
LUMBAR DWN
C3PS32A-18
BU-BN,0.5,2015
C3PS21A-4
Pump-Lumbar-Passenger (M287)
LUMBAR PUMP
C3PS32A-19
VT,0.5,1955
C3PS13A-1
C3PS13A-3
BK,0.5,100
F
Sheet2
LIN
C3PS32A-2
WH,0.35,725
SP12834
WH,0.35,545
D
Sheet2
GND
C3PS32A-12
BK,0.75,985
E
Sheet2
Solenoid-Seat bolster-Passenger (T377)
BOLSTER INF
C3PS32A-16
BN-VT,0.5,1765
C3PS93-2
INFLATE GND
C3PS93-4
BK,0.5,835
G
Sheet2
BOLSTER DEF
C3PS32A-15
GY-BU,0.5,1765
C3PS93-3
DEFLATE GND
C3PS93-5
BK,0.5,835
H
Sheet2

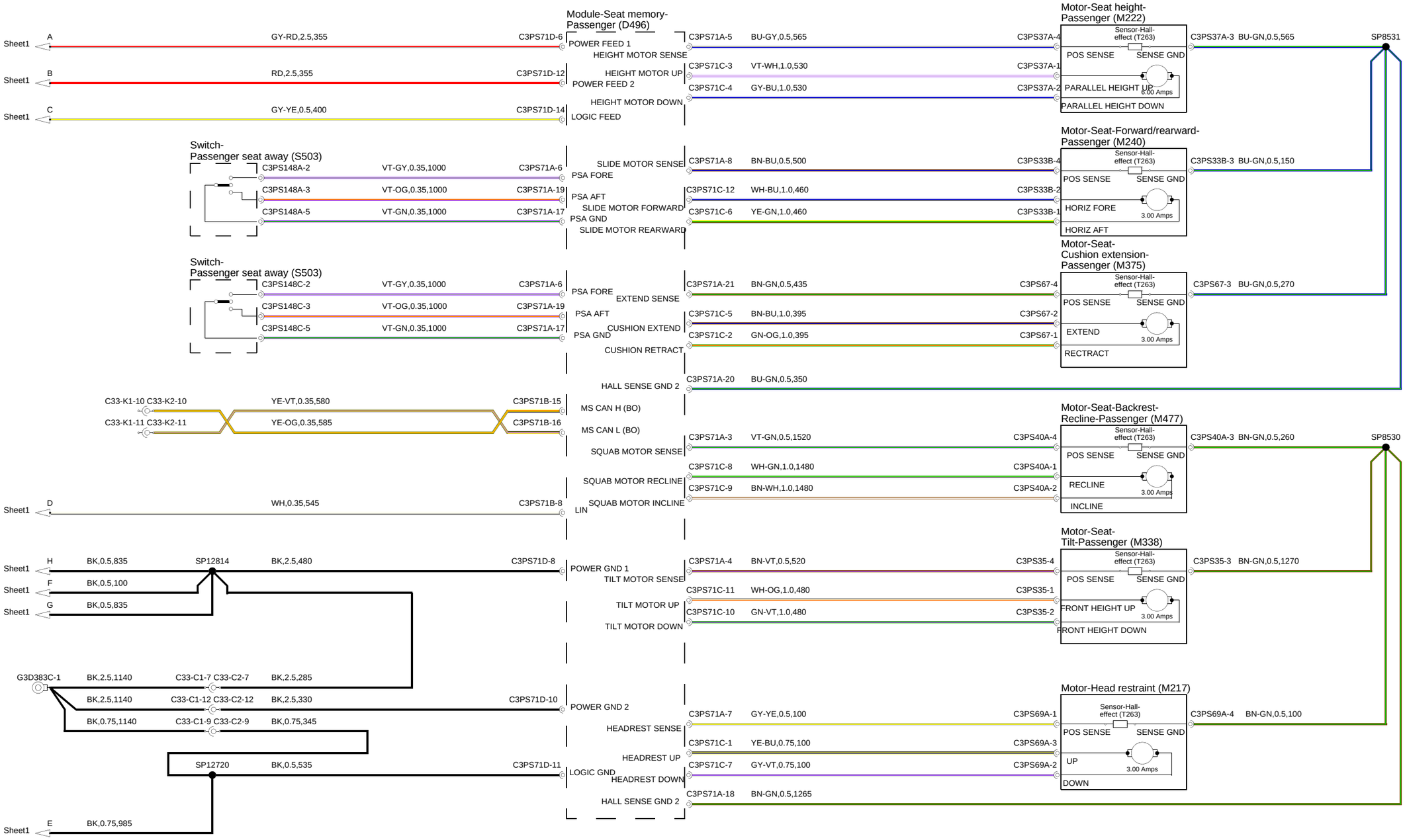
Module-Seat memory-Passenger (D496)
Sheet1 A GY-RD,2.5,355 C3PS71D-6 POWER FEED 1
C3PS71A-5 BU-GY,0.5,565 C3PS37A-4 POS SENSE
Sheet1 B RD,2.5,355 C3PS71D-12 POWER FEED 2
HEIGHT MOTOR UP C3PS71C-3 VT-WH,1.0,530 C3PS37A-1 PARALLEL HEIGHT UP
HEIGHT MOTOR DOWN C3PS71C-4 GY-BU,1.0,530 C3PS37A-2 PARALLEL HEIGHT DOWN
Sheet1 C GY-YE,0.5,400 C3PS71D-14 LOGIC FEED
HEIGHT MOTOR SENSE
Motor-Seat height-Passenger (M222)
Sensor-Hall-effect (T263)
SENSE GND
6.00 Amps
C3PS37A-3 BU-GN,0.5,565 SP8531
Switch-Passenger seat away (S503)
C3PS148A-2 VT-GY,0.35,1000 C3PS71A-6 PSA FORE
C3PS148A-3 VT-OG,0.35,1000 C3PS71A-19 PSA AFT
C3PS148A-5 VT-GN,0.35,1000 C3PS71A-17 PSA GND
SLIDE MOTOR SENSE C3PS71A-8 BN-BU,0.5,500 C3PS33B-4 HORIZ FORE
SLIDE MOTOR FORWARD C3PS71C-12 WH-BU,1.0,460 C3PS33B-2 HORIZ AFT
SLIDE MOTOR REARWARD C3PS71C-6 YE-GN,1.0,460 C3PS33B-1
Motor-Seat-Forward/rearward-Passenger (M240)
3.00 Amps
C3PS33B-3 BU-GN,0.5,150
Switch-Passenger seat away (S503)
C3PS148C-2 VT-GY,0.35,1000 C3PS71A-6 PSA FORE
C3PS148C-3 VT-OG,0.35,1000 C3PS71A-19 PSA AFT
C3PS148C-5 VT-GN,0.35,1000 C3PS71A-17 PSA GND
EXTEND SENSE C3PS71A-21 BN-GN,0.5,435 C3PS67-4 EXTEND
CUSHION EXTEND C3PS71C-5 BN-BU,1.0,395 C3PS67-2 RECTRACT
CUSHION RETRACT C3PS71C-2 GN-OG,1.0,395 C3PS67-1
Motor-Seat-Cushion extension-Passenger (M375)
C3PS67-3 BU-GN,0.5,270
HALL SENSE GND 2 C3PS71A-20 BU-GN,0.5,350
C33-K1-10 C33-K2-10 YE-VT,0.35,580 C3PS71B-15 MS CAN H (BO)
C33-K1-11 C33-K2-11 YE-OG,0.35,585 C3PS71B-16 MS CAN L (BO)
SQUAB MOTOR SENSE C3PS71A-3 VT-GN,0.5,1520 C3PS40A-4 POS SENSE
SQUAB MOTOR RECLINE C3PS71C-8 WH-GN,1.0,1480 C3PS40A-1 RECLINE
SQUAB MOTOR INCLINE C3PS71C-9 BN-WH,1.0,1480 C3PS40A-2 INCLINE
Sheet1 D WH,0.35,545 C3PS71B-8 LIN
Motor-Seat-Backrest-Recline-Passenger (M477)
C3PS40A-3 BN-GN,0.5,260 SP8530
Sheet1 H BK,0.5,835 SP12814 BK,2.5,480 C3PS71D-8 POWER GND 1
Sheet1 F BK,0.5,100
Sheet1 G BK,0.5,835
TILT MOTOR SENSE C3PS71A-4 BN-VT,0.5,520 C3PS35-4 FRONT HEIGHT UP
TILT MOTOR UP C3PS71C-11 WH-OG,1.0,480 C3PS35-1 FRONT HEIGHT DOWN
TILT MOTOR DOWN C3PS71C-10 GN-VT,1.0,480 C3PS35-2
Motor-Seat-Tilt-Passenger (M338)
C3PS35-3 BN-GN,0.5,1270
G3D383C-1 BK,2.5,1140 C33-C1-7 C33-C2-7 BK,2.5,285
BK,2.5,1140 C33-C1-12 C33-C2-12 BK,2.5,330 C3PS71D-10 POWER GND 2
BK,0.75,1140 C33-C1-9 C33-C2-9 BK,0.75,345
SP12720 BK,0.5,535 C3PS71D-11 LOGIC GND
HEADREST SENSE C3PS71A-7 GY-YE,0.5,100 C3PS69A-1 UP
HEADREST UP C3PS71C-1 YE-BU,0.75,100 C3PS69A-3 DOWN
HEADREST DOWN C3PS71C-7 GY-VT,0.75,100 C3PS69A-2
HALL SENSE GND 2 C3PS71A-18 BN-GN,0.5,1265
Motor-Head restraint (M217)
C3PS69A-4 BN-GN,0.5,100
Sheet1 E BK,0.75,985

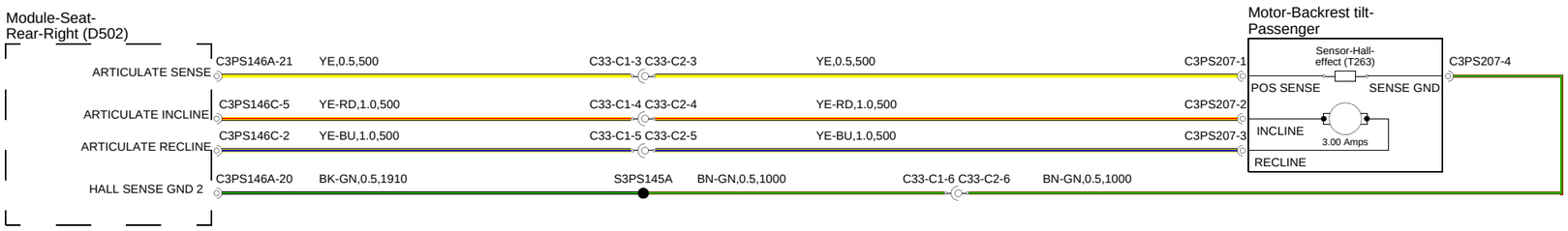
Module-Seat-
Rear-Right (D502)
ARTICULATE SENSE
C3PS146A-21
YE,0.5,500
C33-C1-3 C33-C2-3
YE,0.5,500
C3PS207-1
ARTICULATE INCLINE
C3PS146C-5
YE-RD,1.0,500
C33-C1-4 C33-C2-4
YE-RD,1.0,500
C3PS207-2
ARTICULATE RECLINE
C3PS146C-2
YE-BU,1.0,500
C33-C1-5 C33-C2-5
YE-BU,1.0,500
C3PS207-3
HALL SENSE GND 2
C3PS146A-20
BK-GN,0.5,1910
S3PS145A
BN-GN,0.5,1000
C33-C1-6 C33-C2-6
BN-GN,0.5,1000
Motor-Backrest tilt-
Passenger
Sensor-Hall-
effect (T263)
POS SENSE
SENSE GND
INCLINE
3.00 Amps
RECLINE
C3PS207-4

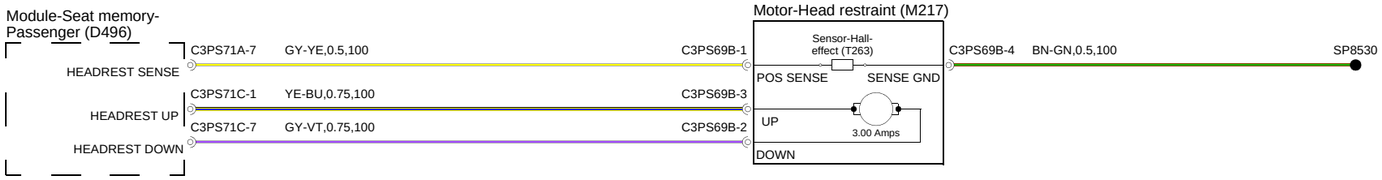
Module-Seat memory-
Passenger (D496)
HEADREST SENSE
C3PS71A-7
GY-YE,0.5,100
C3PS69B-1
HEADREST UP
C3PS71C-1
YE-BU,0.75,100
C3PS69B-3
HEADREST DOWN
C3PS71C-7
GY-VT,0.75,100
C3PS69B-2
Motor-Head restraint (M217)
Sensor-Hall-
effect (T263)
POS SENSE
SENSE GND
UP
3.00 Amps
DOWN
C3PS69B-4
BN-GN,0.5,100
SP8530

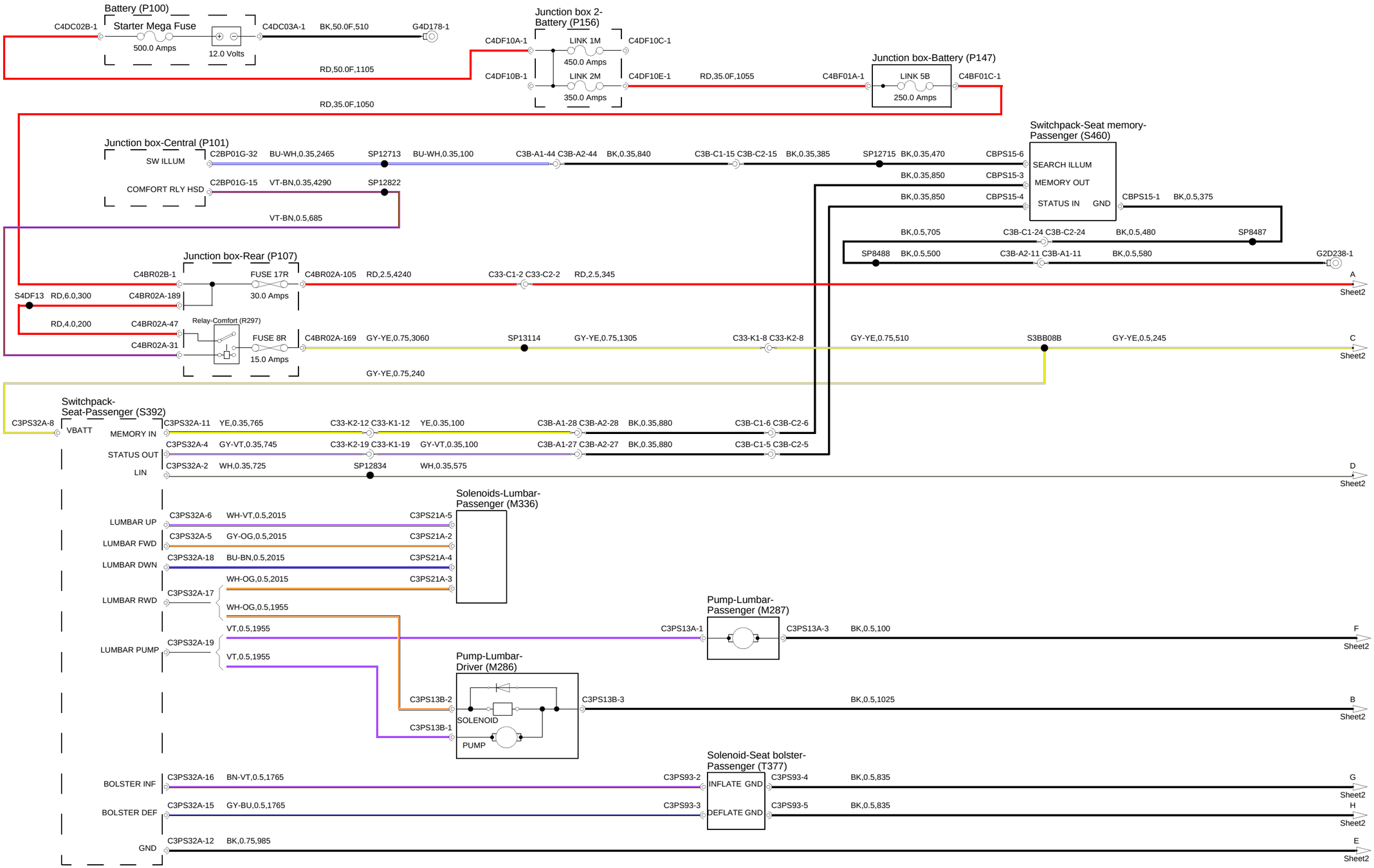
Battery (P100)
Starter Mega Fuse
500.0 Amps
12.0 Volts
C4DC02B-1
C4DC03A-1
BK,50.0F,510
G4D178-1
RD,50.0F,1105
Junction box 2-Battery (P156)
C4DF10A-1
LINK 1M
450.0 Amps
C4DF10C-1
C4DF10B-1
LINK 2M
350.0 Amps
C4DF10E-1
RD,35.0F,1055
C4BF01A-1
Junction box-Battery (P147)
LINK 5B
250.0 Amps
C4BF01C-1
RD,35.0F,1050
Junction box-Central (P101)
SW ILLUM
C2BP01G-32
BU-WH,0.35,2465
SP12713
BU-WH,0.35,100
C3B-A1-44 C3B-A2-44
BK,0.35,840
C3B-C1-15 C3B-C2-15
BK,0.35,385
SP12715
BK,0.35,470
CBPS15-6
Switchpack-Seat memory-Passenger (S460)
SEARCH ILLUM
MEMORY OUT
STATUS IN
GND
COMFORT RLY HSD
C2BP01G-15
VT-BN,0.35,4290
SP12822
VT-BN,0.5,685
BK,0.35,850
CBPS15-3
BK,0.35,850
CBPS15-4
CBPS15-1
BK,0.5,375
BK,0.5,705
C3B-C1-24 C3B-C2-24
BK,0.5,480
SP8487
SP8488
BK,0.5,500
C3B-A2-11 C3B-A1-11
BK,0.5,580
G2D238-1
Junction box-Rear (P107)
C4BR02B-1
FUSE 17R
30.0 Amps
C4BR02A-105
RD,2.5,4240
C33-C1-2 C33-C2-2
RD,2.5,345
A
Sheet2
S4DF13
RD,6.0,300
C4BR02A-189
RD,4.0,200
C4BR02A-47
C4BR02A-31
Relay-Comfort (R297)
FUSE 8R
15.0 Amps
C4BR02A-169
GY-YE,0.75,3060
SP13114
GY-YE,0.75,1305
C33-K1-8 C33-K2-8
GY-YE,0.75,510
S3BB08B
GY-YE,0.5,245
C
Sheet2
GY-YE,0.75,240
Switchpack-Seat-Passenger (S392)
C3PS32A-8
VBATT
MEMORY IN
C3PS32A-11
YE,0.35,765
C33-K2-12 C33-K1-12
YE,0.35,100
C3B-A1-28 C3B-A2-28
BK,0.35,880
C3B-C1-6 C3B-C2-6
STATUS OUT
C3PS32A-4
GY-VT,0.35,745
C33-K2-19 C33-K1-19
GY-VT,0.35,100
C3B-A1-27 C3B-A2-27
BK,0.35,880
C3B-C1-5 C3B-C2-5
LIN
C3PS32A-2
WH,0.35,725
SP12834
WH,0.35,575
D
Sheet2
Solenoids-Lumbar-Passenger (M336)
LUMBAR UP
C3PS32A-6
WH-VT,0.5,2015
C3PS21A-5
LUMBAR FWD
C3PS32A-5
GY-OG,0.5,2015
C3PS21A-2
LUMBAR DWN
C3PS32A-18
BU-BN,0.5,2015
C3PS21A-4
LUMBAR RWD
C3PS32A-17
WH-OG,0.5,2015
C3PS21A-3
WH-OG,0.5,1955
Pump-Lumbar-Passenger (M287)
LUMBAR PUMP
C3PS32A-19
VT,0.5,1955
C3PS13A-1
C3PS13A-3
BK,0.5,100
F
Sheet2
VT,0.5,1955
Pump-Lumbar-Driver (M286)
C3PS13B-2
C3PS13B-3
BK,0.5,1025
B
Sheet2
SOLENOID
C3PS13B-1
PUMP
Solenoid-Seat bolster-Passenger (T377)
BOLSTER INF
C3PS32A-16
BN-VT,0.5,1765
C3PS93-2
INFLATE GND
C3PS93-4
BK,0.5,835
G
Sheet2
BOLSTER DEF
C3PS32A-15
GY-BU,0.5,1765
C3PS93-3
DEFLATE GND
C3PS93-5
BK,0.5,835
H
Sheet2
GND
C3PS32A-12
BK,0.75,985
E
Sheet2

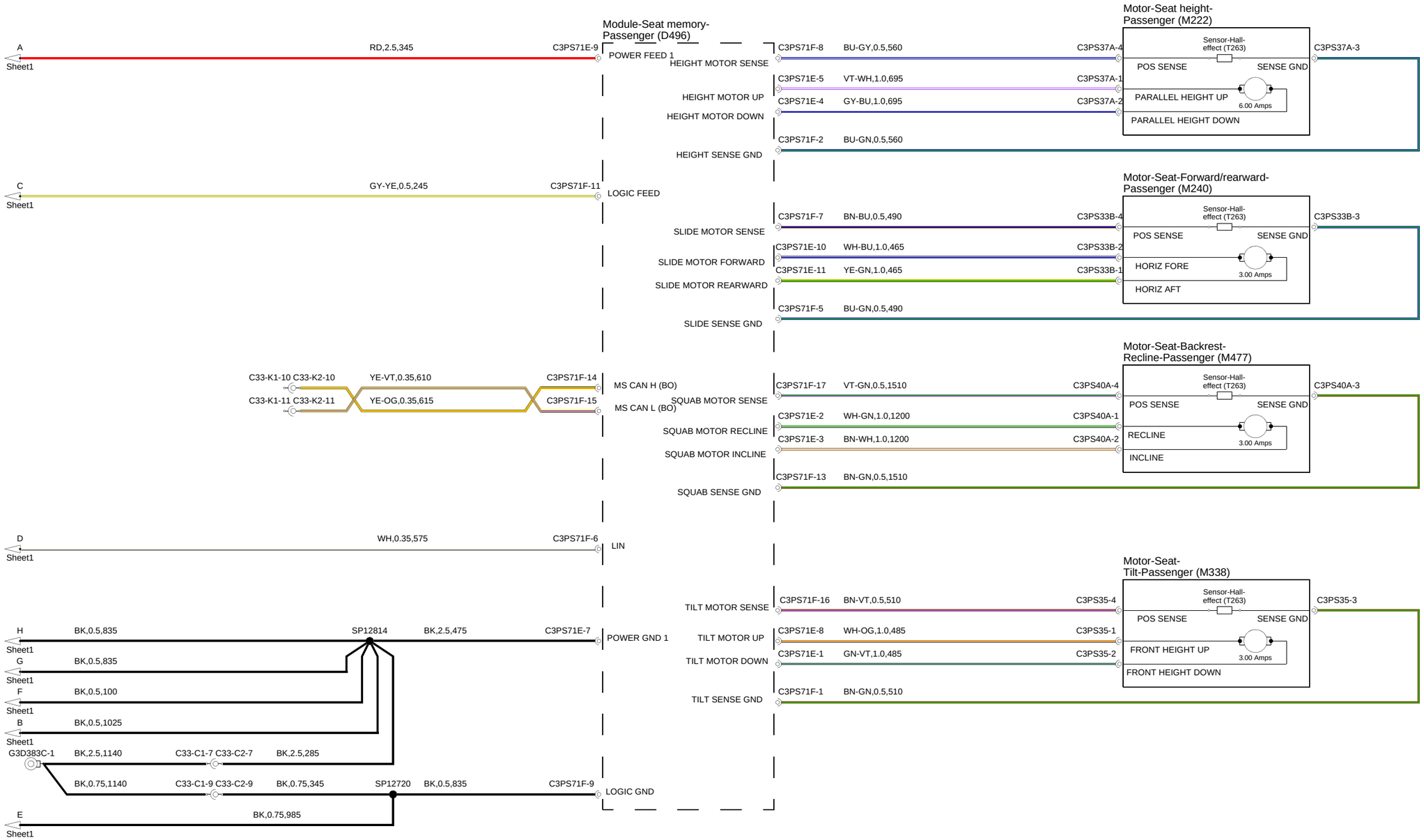
Module-Seat memory-Passenger (D496)
A
Sheet1
RD,2.5,345
C3PS71E-9
POWER FEED 1
C3PS71F-8
BU-GY,0.5,560
C3PS37A-4
HEIGHT MOTOR SENSE
Motor-Seat height-Passenger (M222)
Sensor-Hall-effect (T263)
POS SENSE
SENSE GND
C3PS37A-3
C3PS71E-5
VT-WH,1.0,695
C3PS37A-1
HEIGHT MOTOR UP
PARALLEL HEIGHT UP
6.00 Amps
C3PS71E-4
GY-BU,1.0,695
C3PS37A-2
HEIGHT MOTOR DOWN
PARALLEL HEIGHT DOWN
C3PS71F-2
BU-GN,0.5,560
HEIGHT SENSE GND
C
Sheet1
GY-YE,0.5,245
C3PS71F-11
LOGIC FEED
Motor-Seat-Forward/rearward-Passenger (M240)
C3PS71F-7
BN-BU,0.5,490
C3PS33B-4
SLIDE MOTOR SENSE
C3PS33B-3
C3PS71E-10
WH-BU,1.0,465
C3PS33B-2
SLIDE MOTOR FORWARD
HORIZ FORE
3.00 Amps
C3PS71E-11
YE-GN,1.0,465
C3PS33B-1
SLIDE MOTOR REARWARD
HORIZ AFT
C3PS71F-5
BU-GN,0.5,490
SLIDE SENSE GND
Motor-Seat-Backrest-Recline-Passenger (M477)
C33-K1-10 C33-K2-10
YE-VT,0.35,610
C3PS71F-14
MS CAN H (BO)
C3PS71F-17
VT-GN,0.5,1510
C3PS40A-4
C3PS40A-3
C33-K1-11 C33-K2-11
YE-OG,0.35,615
C3PS71F-15
MS CAN L (BO)
SQUAB MOTOR SENSE
C3PS71E-2
WH-GN,1.0,1200
C3PS40A-1
SQUAB MOTOR RECLINE
RECLINE
C3PS71E-3
BN-WH,1.0,1200
C3PS40A-2
SQUAB MOTOR INCLINE
INCLINE
C3PS71F-13
BN-GN,0.5,1510
SQUAB SENSE GND
D
Sheet1
WH,0.35,575
C3PS71F-6
LIN
Motor-Seat-Tilt-Passenger (M338)
TILT MOTOR SENSE
C3PS71F-16
BN-VT,0.5,510
C3PS35-4
C3PS35-3
H
Sheet1
BK,0.5,835
SP12814
BK,2.5,475
C3PS71E-7
POWER GND 1
TILT MOTOR UP
C3PS71E-8
WH-OG,1.0,485
C3PS35-1
FRONT HEIGHT UP
G
Sheet1
BK,0.5,835
TILT MOTOR DOWN
C3PS71E-1
GN-VT,1.0,485
C3PS35-2
FRONT HEIGHT DOWN
F
Sheet1
BK,0.5,100
TILT SENSE GND
C3PS71F-1
BN-GN,0.5,510
B
Sheet1
BK,0.5,1025
G3D383C-1
BK,2.5,1140
C33-C1-7 C33-C2-7
BK,2.5,285
BK,0.75,1140
C33-C1-9 C33-C2-9
BK,0.75,345
SP12720
BK,0.5,835
C3PS71F-9
LOGIC GND
E
Sheet1
BK,0.75,985

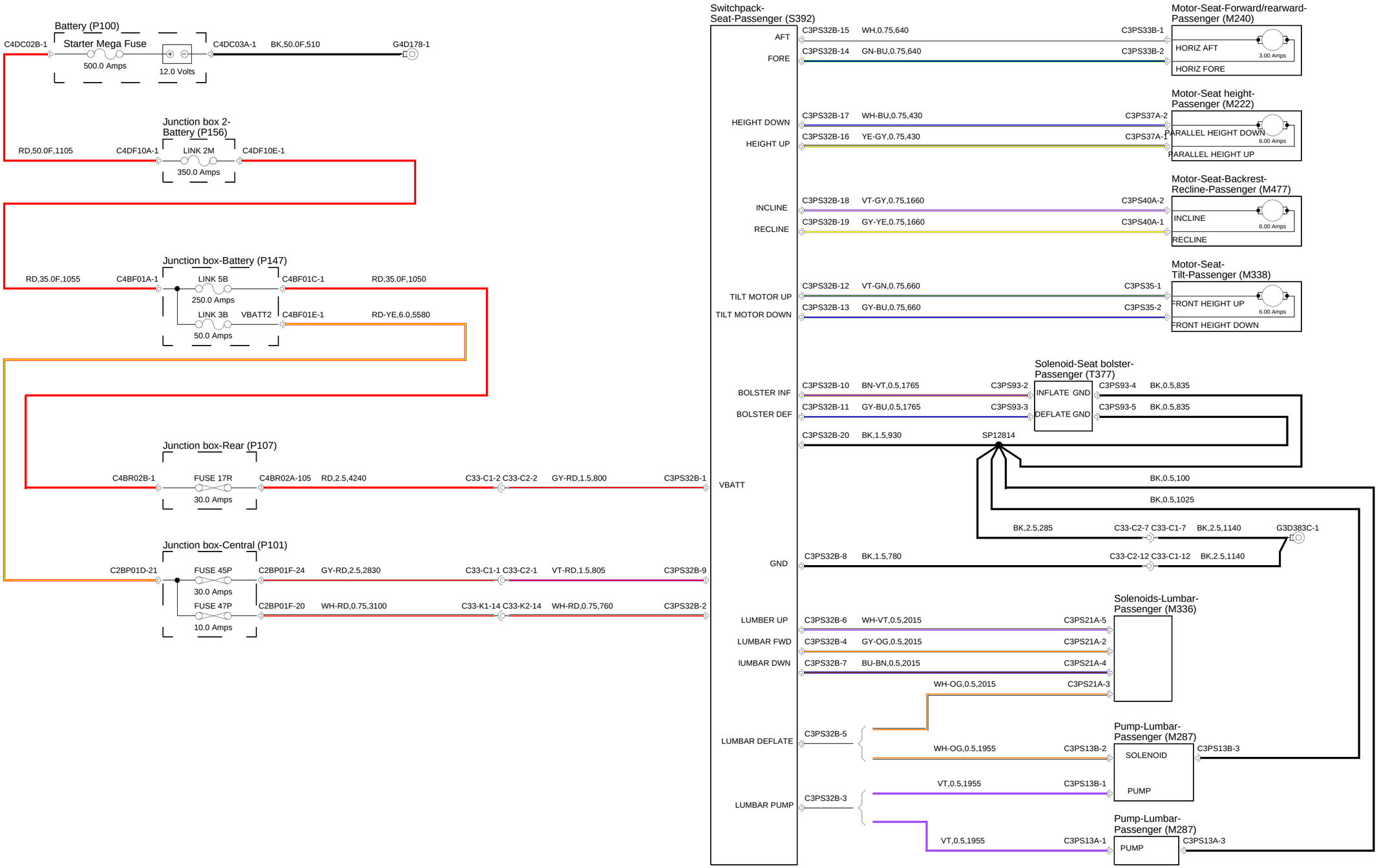
Battery (P100)
C4DC02B-1
Starter Mega Fuse
500.0 Amps
12.0 Volts
C4DC03A-1
BK,50.0F,510
G4D178-1
Junction box 2-Battery (P156)
RD,50.0F,1105
C4DF10A-1
LINK 2M
350.0 Amps
C4DF10E-1
Junction box-Battery (P147)
RD,35.0F,1055
C4BF01A-1
LINK 5B
250.0 Amps
C4BF01C-1
RD,35.0F,1050
LINK 3B
VBATT2
50.0 Amps
C4BF01E-1
RD-YE,6.0,5580
Junction box-Rear (P107)
C4BR02B-1
FUSE 17R
30.0 Amps
C4BR02A-105
RD,2.5,4240
C33-C1-2 C33-C2-2
GY-RD,1.5,800
C3PS32B-1
Junction box-Central (P101)
C2BP01D-21
FUSE 45P
30.0 Amps
C2BP01F-24
GY-RD,2.5,2830
C33-C1-1 C33-C2-1
VT-RD,1.5,805
C3PS32B-9
FUSE 47P
10.0 Amps
C2BP01F-20
WH-RD,0.75,3100
C33-K1-14 C33-K2-14
WH-RD,0.75,760
C3PS32B-2
Switchpack-Seat-Passenger (S392)
AFT
FORE
HEIGHT DOWN
HEIGHT UP
INCLINE
RECLINE
TILT MOTOR UP
TILT MOTOR DOWN
BOLSTER INF
BOLSTER DEF
VBATT
GND
LUMBER UP
LUMBAR FWD
lUMBAR DWN
LUMBAR DEFLATE
LUMBAR PUMP
C3PS32B-15
WH,0.75,640
C3PS33B-1
C3PS32B-14
GN-BU,0.75,640
C3PS33B-2
Motor-Seat-Forward/rearward-Passenger (M240)
HORIZ AFT
3.00 Amps
HORIZ FORE
C3PS32B-17
WH-BU,0.75,430
C3PS37A-2
C3PS32B-16
YE-GY,0.75,430
C3PS37A-1
Motor-Seat height-Passenger (M222)
PARALLEL HEIGHT DOWN
6.00 Amps
PARALLEL HEIGHT UP
C3PS32B-18
VT-GY,0.75,1660
C3PS40A-2
C3PS32B-19
GY-YE,0.75,1660
C3PS40A-1
Motor-Seat-Backrest-Recline-Passenger (M477)
INCLINE
6.00 Amps
RECLINE
C3PS32B-12
VT-GN,0.75,660
C3PS35-1
C3PS32B-13
GY-BU,0.75,660
C3PS35-2
Motor-Seat-Tilt-Passenger (M338)
FRONT HEIGHT UP
6.00 Amps
FRONT HEIGHT DOWN
Solenoid-Seat bolster-Passenger (T377)
C3PS32B-10
BN-VT,0.5,1765
C3PS93-2
INFLATE GND
C3PS93-4
BK,0.5,835
C3PS32B-11
GY-BU,0.5,1765
C3PS93-3
DEFLATE GND
C3PS93-5
BK,0.5,835
C3PS32B-20
BK,1.5,930
SP12814
BK,0.5,100
BK,0.5,1025
BK,2.5,285
C33-C2-7 C33-C1-7
BK,2.5,1140
G3D383C-1
C3PS32B-8
BK,1.5,780
C33-C2-12 C33-C1-12
BK,2.5,1140
Solenoids-Lumbar-Passenger (M336)
C3PS32B-6
WH-VT,0.5,2015
C3PS21A-5
C3PS32B-4
GY-OG,0.5,2015
C3PS21A-2
C3PS32B-7
BU-BN,0.5,2015
C3PS21A-4
WH-OG,0.5,2015
C3PS21A-3
C3PS32B-5
WH-OG,0.5,1955
C3PS13B-2
Pump-Lumbar-Passenger (M287)
SOLENOID
PUMP
C3PS13B-3
VT,0.5,1955
C3PS13B-1
C3PS32B-3
VT,0.5,1955
C3PS13A-1
Pump-Lumbar-Passenger (M287)
PUMP
C3PS13A-3

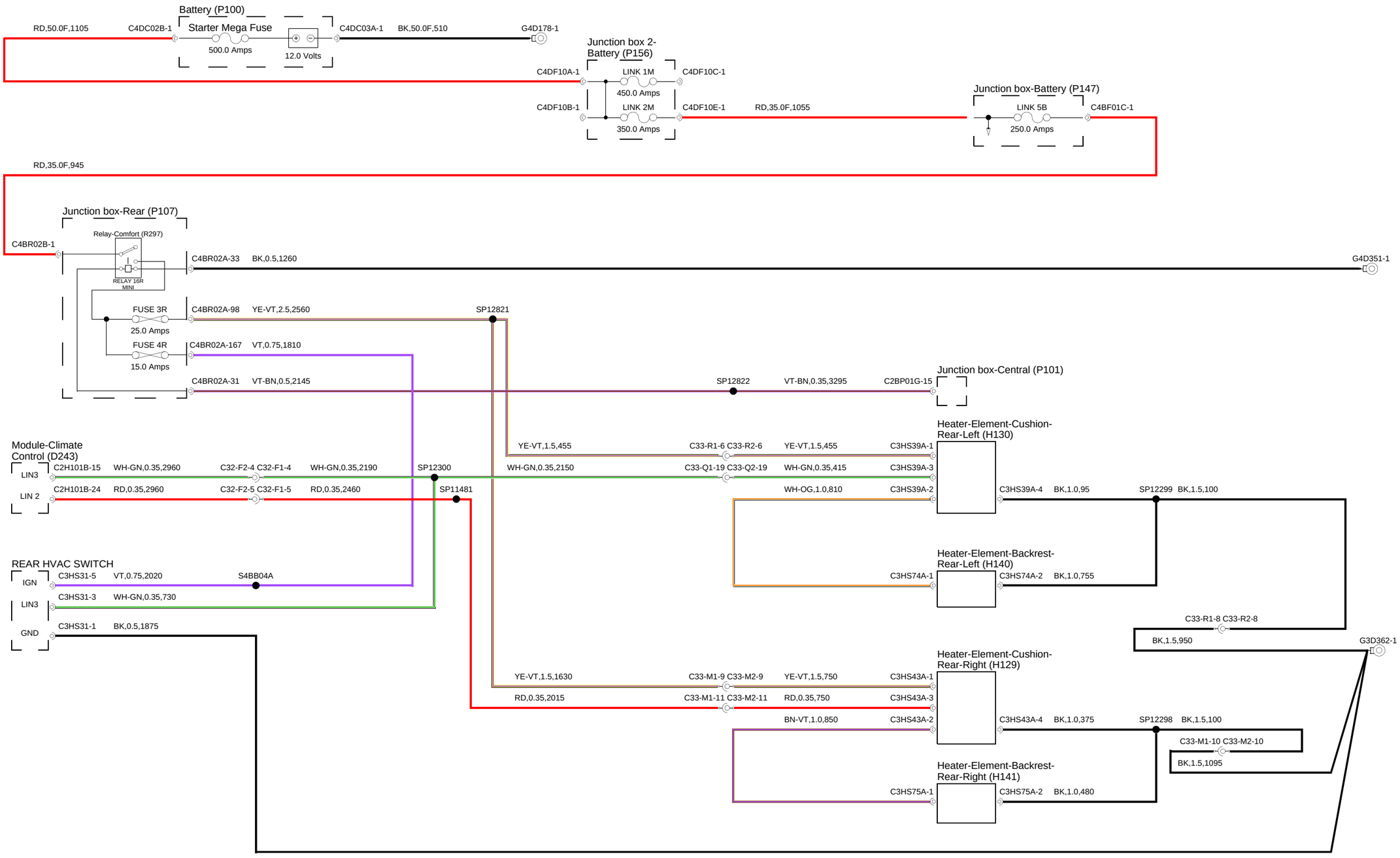
Battery (P100)
Starter Mega Fuse
500.0 Amps
12.0 Volts
RD,50.0F,1105
C4DC02B-1
C4DC03A-1
BK,50.0F,510
G4D178-1
Junction box 2-Battery (P156)
C4DF10A-1
LINK 1M
450.0 Amps
C4DF10C-1
C4DF10B-1
LINK 2M
350.0 Amps
C4DF10E-1
RD,35.0F,1055
Junction box-Battery (P147)
LINK 5B
250.0 Amps
C4BF01C-1
RD,35.0F,945
Junction box-Rear (P107)
Relay-Comfort (R297)
RELAY 16R MINI
C4BR02B-1
C4BR02A-33
BK,0.5,1260
G4D351-1
FUSE 3R
25.0 Amps
C4BR02A-98
YE-VT,2.5,2560
SP12821
FUSE 4R
15.0 Amps
C4BR02A-167
VT,0.75,1810
C4BR02A-31
VT-BN,0.5,2145
SP12822
VT-BN,0.35,3295
C2BP01G-15
Junction box-Central (P101)
Module-Climate Control (D243)
LIN3
C2H101B-15
WH-GN,0.35,2960
C32-F2-4 C32-F1-4
WH-GN,0.35,2190
SP12300
LIN 2
C2H101B-24
RD,0.35,2960
C32-F2-5 C32-F1-5
RD,0.35,2460
SP11481
YE-VT,1.5,455
C33-R1-6 C33-R2-6
YE-VT,1.5,455
C3HS39A-1
WH-GN,0.35,2150
C33-Q1-19 C33-Q2-19
WH-GN,0.35,415
C3HS39A-3
WH-OG,1.0,810
C3HS39A-2
Heater-Element-Cushion-Rear-Left (H130)
C3HS39A-4
BK,1.0,95
SP12299
BK,1.5,100
Heater-Element-Backrest-Rear-Left (H140)
C3HS74A-1
C3HS74A-2
BK,1.0,755
REAR HVAC SWITCH
IGN
C3HS31-5
VT,0.75,2020
S4BB04A
LIN3
C3HS31-3
WH-GN,0.35,730
GND
C3HS31-1
BK,0.5,1875
C33-R1-8 C33-R2-8
BK,1.5,950
G3D362-1
YE-VT,1.5,1630
C33-M1-9 C33-M2-9
YE-VT,1.5,750
C3HS43A-1
RD,0.35,2015
C33-M1-11 C33-M2-11
RD,0.35,750
C3HS43A-3
BN-VT,1.0,850
C3HS43A-2
Heater-Element-Cushion-Rear-Right (H129)
C3HS43A-4
BK,1.0,375
SP12298
BK,1.5,100
C33-M1-10 C33-M2-10
BK,1.5,1095
Heater-Element-Backrest-Rear-Right (H141)
C3HS75A-1
C3HS75A-2
BK,1.0,480

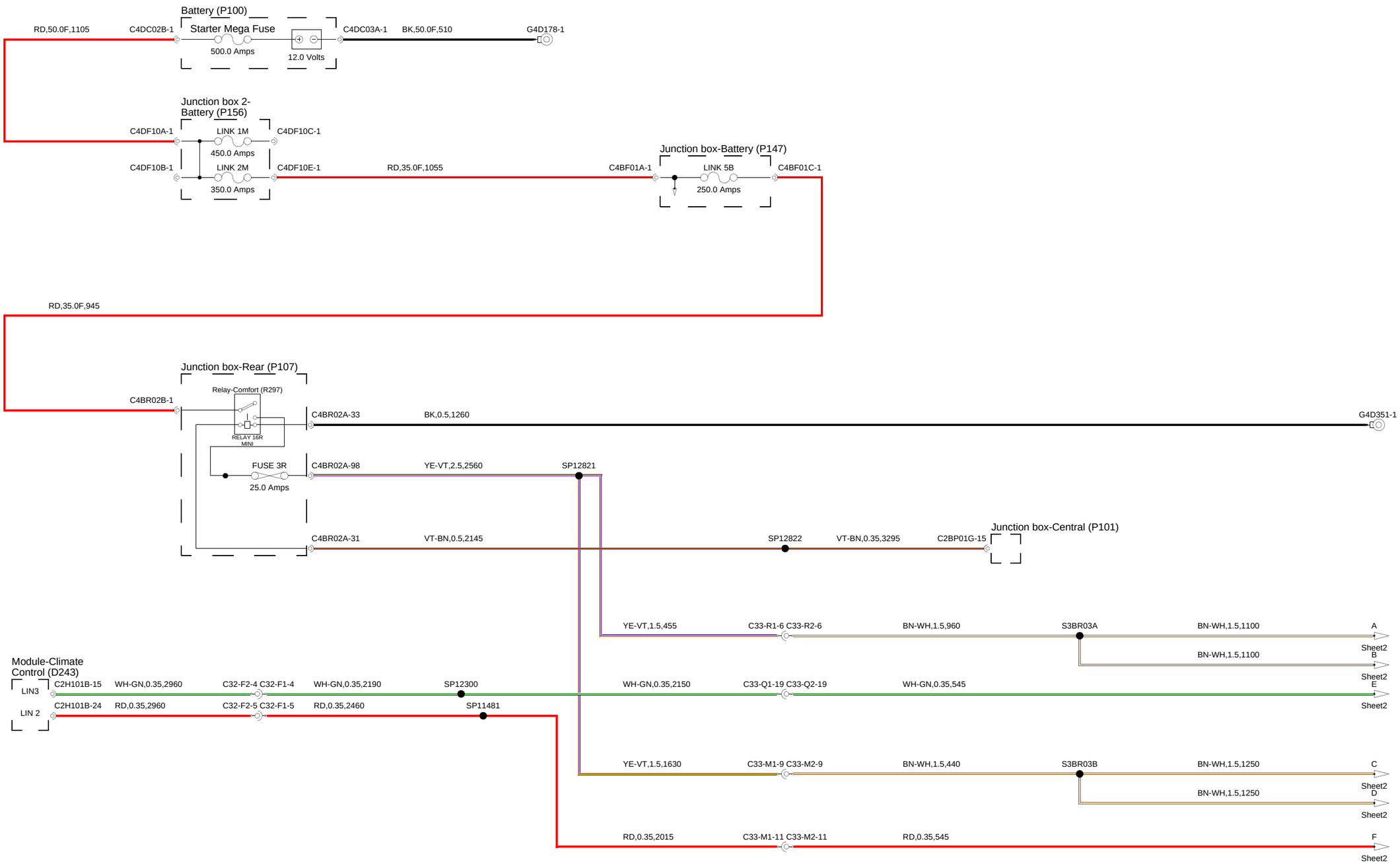
Battery (P100)
Starter Mega Fuse
500.0 Amps
12.0 Volts
RD,50.0F,1105
C4DC02B-1
C4DC03A-1
BK,50.0F,510
G4D178-1
Junction box 2-
Battery (P156)
C4DF10A-1
LINK 1M
450.0 Amps
C4DF10C-1
C4DF10B-1
LINK 2M
350.0 Amps
C4DF10E-1
RD,35.0F,1055
Junction box-Battery (P147)
C4BF01A-1
LINK 5B
250.0 Amps
C4BF01C-1
RD,35.0F,945
Junction box-Rear (P107)
Relay-Comfort (R297)
RELAY 16R
MINI
C4BR02B-1
C4BR02A-33
BK,0.5,1260
G4D351-1
FUSE 3R
25.0 Amps
C4BR02A-98
YE-VT,2.5,2560
SP12821
C4BR02A-31
VT-BN,0.5,2145
SP12822
VT-BN,0.35,3295
C2BP01G-15
Junction box-Central (P101)
YE-VT,1.5,455
C33-R1-6 C33-R2-6
BN-WH,1.5,960
S3BR03A
BN-WH,1.5,1100
A
Sheet2
BN-WH,1.5,1100
B
Sheet2
Module-Climate
Control (D243)
LIN3
C2H101B-15
WH-GN,0.35,2960
C32-F2-4 C32-F1-4
WH-GN,0.35,2190
SP12300
WH-GN,0.35,2150
C33-Q1-19 C33-Q2-19
WH-GN,0.35,545
E
Sheet2
LIN 2
C2H101B-24
RD,0.35,2960
C32-F2-5 C32-F1-5
RD,0.35,2460
SP11481
YE-VT,1.5,1630
C33-M1-9 C33-M2-9
BN-WH,1.5,440
S3BR03B
BN-WH,1.5,1250
C
Sheet2
BN-WH,1.5,1250
D
Sheet2
RD,0.35,2015
C33-M1-11 C33-M2-11
RD,0.35,545
F
Sheet2

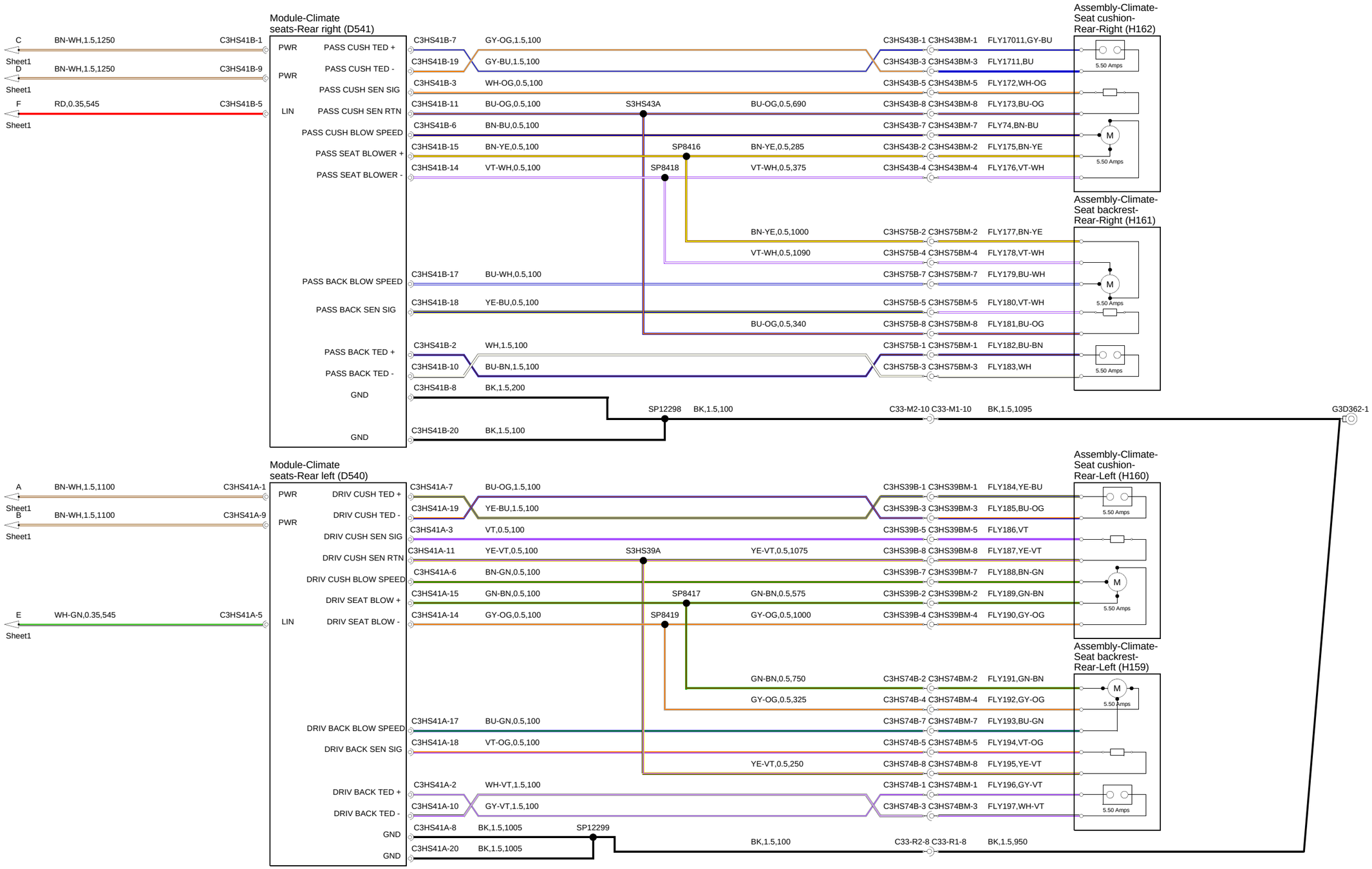
Module-Climate seats-Rear right (D541)
Assembly-Climate-Seat cushion-Rear-Right (H162)
Assembly-Climate-Seat backrest-Rear-Right (H161)
C BN-WH,1.5,1250 C3HS41B-1 Sheet1
D BN-WH,1.5,1250 C3HS41B-9 Sheet1
F RD,0.35,545 C3HS41B-5 Sheet1
PWR PASS CUSH TED + C3HS41B-7 GY-OG,1.5,100 C3HS43B-1 C3HS43BM-1 FLY17011,GY-BU
PWR PASS CUSH TED - C3HS41B-19 GY-BU,1.5,100 C3HS43B-3 C3HS43BM-3 FLY1711,BU
PASS CUSH SEN SIG C3HS41B-3 WH-OG,0.5,100 C3HS43B-5 C3HS43BM-5 FLY172,WH-OG
LIN PASS CUSH SEN RTN C3HS41B-11 BU-OG,0.5,100 S3HS43A BU-OG,0.5,690 C3HS43B-8 C3HS43BM-8 FLY173,BU-OG
PASS CUSH BLOW SPEED C3HS41B-6 BN-BU,0.5,100 C3HS43B-7 C3HS43BM-7 FLY74,BN-BU
PASS SEAT BLOWER + C3HS41B-15 BN-YE,0.5,100 SP8416 BN-YE,0.5,285 C3HS43B-2 C3HS43BM-2 FLY175,BN-YE
PASS SEAT BLOWER - C3HS41B-14 VT-WH,0.5,100 SP8418 VT-WH,0.5,375 C3HS43B-4 C3HS43BM-4 FLY176,VT-WH
BN-YE,0.5,1000 C3HS75B-2 C3HS75BM-2 FLY177,BN-YE
VT-WH,0.5,1090 C3HS75B-4 C3HS75BM-4 FLY178,VT-WH
PASS BACK BLOW SPEED C3HS41B-17 BU-WH,0.5,100 C3HS75B-7 C3HS75BM-7 FLY179,BU-WH
PASS BACK SEN SIG C3HS41B-18 YE-BU,0.5,100 C3HS75B-5 C3HS75BM-5 FLY180,VT-WH
BU-OG,0.5,340 C3HS75B-8 C3HS75BM-8 FLY181,BU-OG
PASS BACK TED + C3HS41B-2 WH,1.5,100 C3HS75B-1 C3HS75BM-1 FLY182,BU-BN
PASS BACK TED - C3HS41B-10 BU-BN,1.5,100 C3HS75B-3 C3HS75BM-3 FLY183,WH
GND C3HS41B-8 BK,1.5,200
SP12298 BK,1.5,100 C33-M2-10 C33-M1-10 BK,1.5,1095 G3D362-1
GND C3HS41B-20 BK,1.5,100
5.50 Amps
M
Module-Climate seats-Rear left (D540)
Assembly-Climate-Seat cushion-Rear-Left (H160)
Assembly-Climate-Seat backrest-Rear-Left (H159)
A BN-WH,1.5,1100 C3HS41A-1 Sheet1
B BN-WH,1.5,1100 C3HS41A-9 Sheet1
E WH-GN,0.35,545 C3HS41A-5 Sheet1
PWR DRIV CUSH TED + C3HS41A-7 BU-OG,1.5,100 C3HS39B-1 C3HS39BM-1 FLY184,YE-BU
PWR DRIV CUSH TED - C3HS41A-19 YE-BU,1.5,100 C3HS39B-3 C3HS39BM-3 FLY185,BU-OG
DRIV CUSH SEN SIG C3HS41A-3 VT,0.5,100 C3HS39B-5 C3HS39BM-5 FLY186,VT
DRIV CUSH SEN RTN C3HS41A-11 YE-VT,0.5,100 S3HS39A YE-VT,0.5,1075 C3HS39B-8 C3HS39BM-8 FLY187,YE-VT
DRIV CUSH BLOW SPEED C3HS41A-6 BN-GN,0.5,100 C3HS39B-7 C3HS39BM-7 FLY188,BN-GN
DRIV SEAT BLOW + C3HS41A-15 GN-BN,0.5,100 SP8417 GN-BN,0.5,575 C3HS39B-2 C3HS39BM-2 FLY189,GN-BN
LIN DRIV SEAT BLOW - C3HS41A-14 GY-OG,0.5,100 SP8419 GY-OG,0.5,1000 C3HS39B-4 C3HS39BM-4 FLY190,GY-OG
GN-BN,0.5,750 C3HS74B-2 C3HS74BM-2 FLY191,GN-BN
GY-OG,0.5,325 C3HS74B-4 C3HS74BM-4 FLY192,GY-OG
DRIV BACK BLOW SPEED C3HS41A-17 BU-GN,0.5,100 C3HS74B-7 C3HS74BM-7 FLY193,BU-GN
DRIV BACK SEN SIG C3HS41A-18 VT-OG,0.5,100 C3HS74B-5 C3HS74BM-5 FLY194,VT-OG
YE-VT,0.5,250 C3HS74B-8 C3HS74BM-8 FLY195,YE-VT
DRIV BACK TED + C3HS41A-2 WH-VT,1.5,100 C3HS74B-1 C3HS74BM-1 FLY196,GY-VT
DRIV BACK TED - C3HS41A-10 GY-VT,1.5,100 C3HS74B-3 C3HS74BM-3 FLY197,WH-VT
GND C3HS41A-8 BK,1.5,1005 SP12299
GND C3HS41A-20 BK,1.5,1005
BK,1.5,100 C33-R2-8 C33-R1-8 BK,1.5,950
5.50 Amps
M

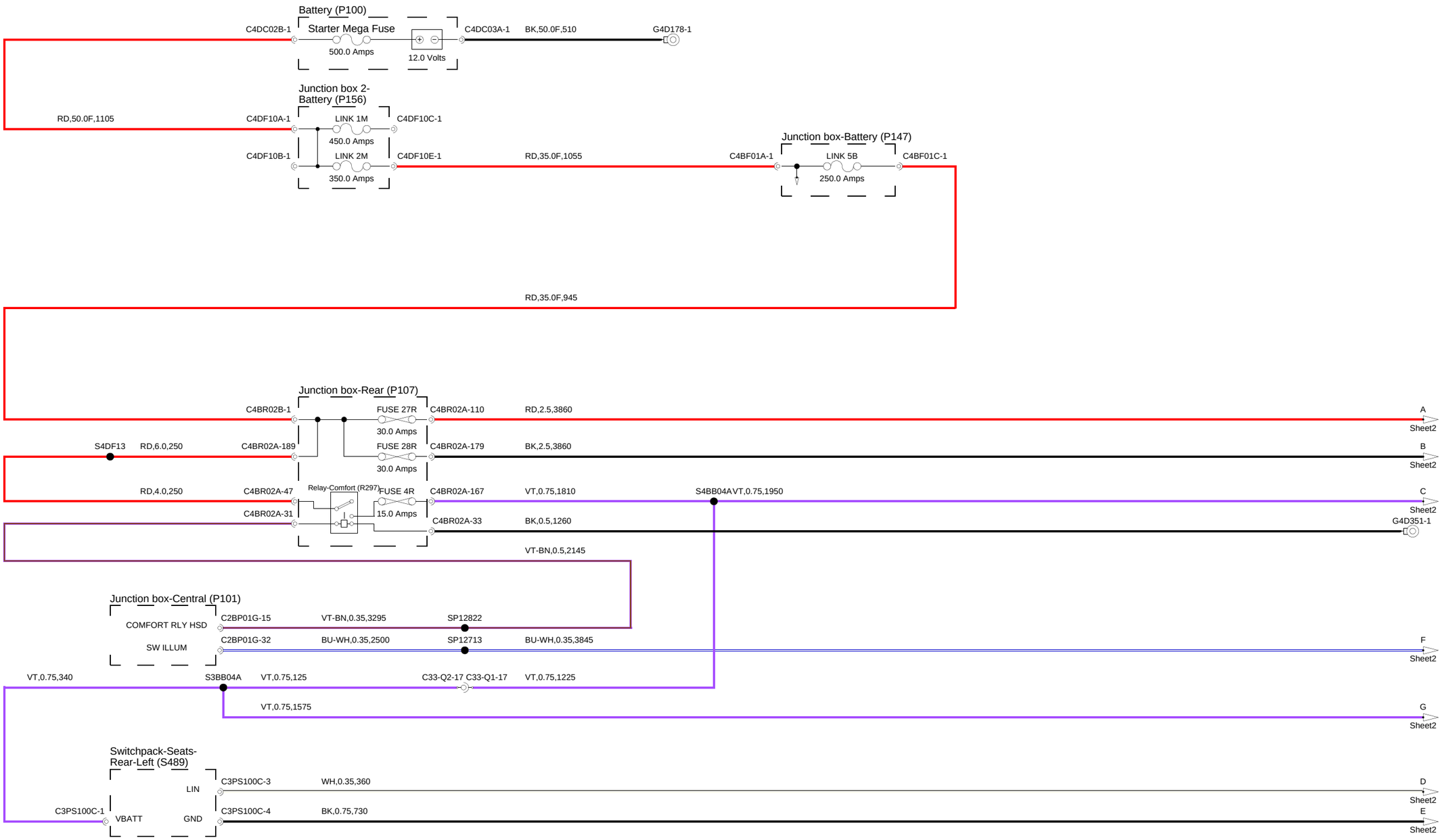
Battery (P100)
C4DC02B-1
Starter Mega Fuse
500.0 Amps
12.0 Volts
C4DC03A-1
BK,50.0F,510
G4D178-1
Junction box 2-
Battery (P156)
RD,50.0F,1105
C4DF10A-1
LINK 1M
450.0 Amps
C4DF10C-1
C4DF10B-1
LINK 2M
350.0 Amps
C4DF10E-1
RD,35.0F,1055
Junction box-Battery (P147)
C4BF01A-1
LINK 5B
250.0 Amps
C4BF01C-1
RD,35.0F,945
Junction box-Rear (P107)
C4BR02B-1
FUSE 27R
30.0 Amps
C4BR02A-110
RD,2.5,3860
A
Sheet2
S4DF13
RD,6.0,250
C4BR02A-189
FUSE 28R
30.0 Amps
C4BR02A-179
BK,2.5,3860
B
Sheet2
RD,4.0,250
C4BR02A-47
Relay-Comfort (R297)
FUSE 4R
15.0 Amps
C4BR02A-167
VT,0.75,1810
S4BB04A
VT,0.75,1950
C
Sheet2
C4BR02A-31
C4BR02A-33
BK,0.5,1260
G4D351-1
VT-BN,0.5,2145
Junction box-Central (P101)
COMFORT RLY HSD
C2BP01G-15
VT-BN,0.35,3295
SP12822
SW ILLUM
C2BP01G-32
BU-WH,0.35,2500
SP12713
BU-WH,0.35,3845
F
Sheet2
VT,0.75,340
S3BB04A
VT,0.75,125
C33-Q2-17 C33-Q1-17
VT,0.75,1225
VT,0.75,1575
G
Sheet2
Switchpack-Seats-
Rear-Left (S489)
LIN
C3PS100C-3
WH,0.35,360
D
Sheet2
C3PS100C-1
VBATT
GND
C3PS100C-4
BK,0.75,730
E
Sheet2

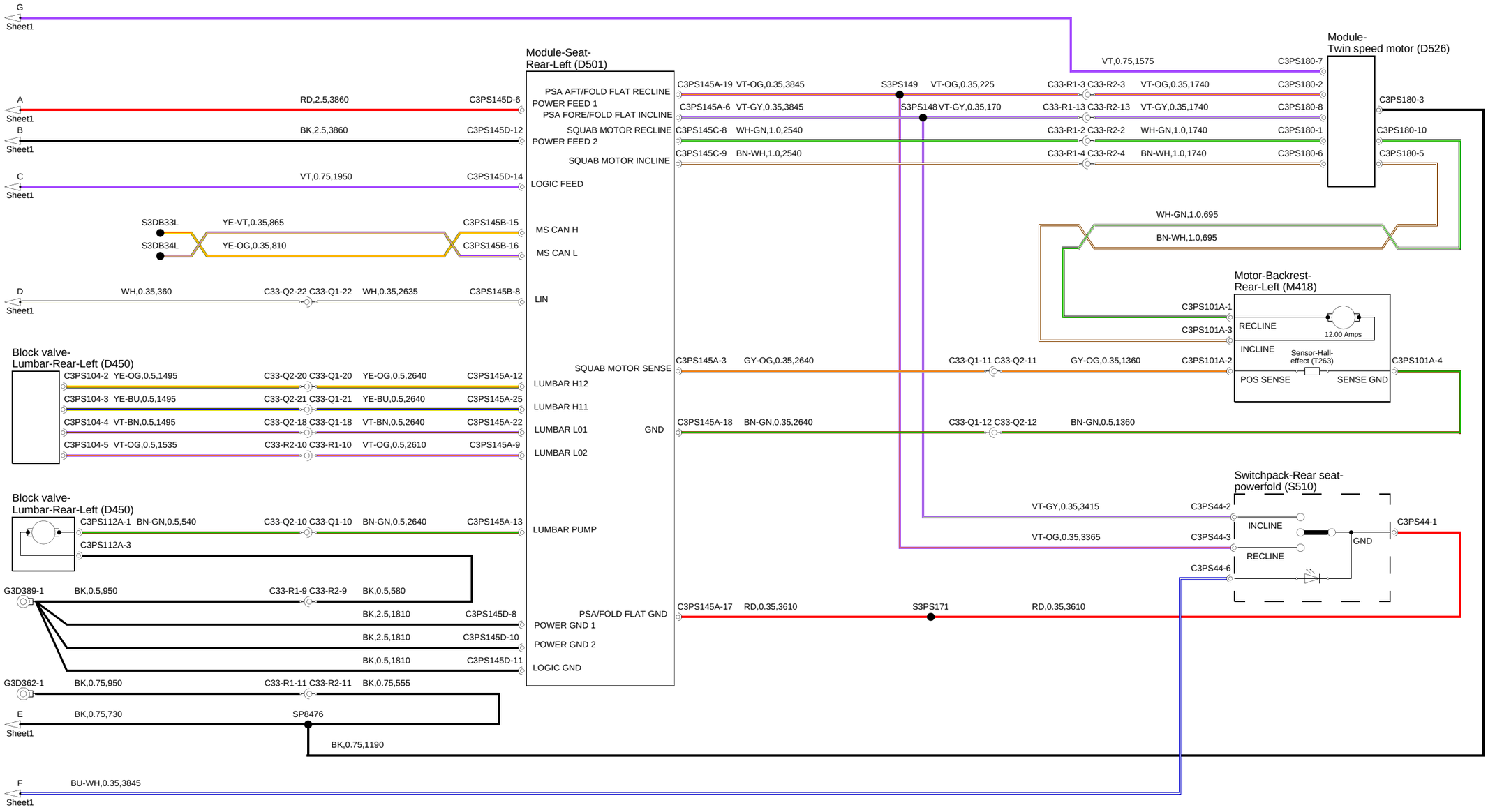
G
Sheet1
Module-Seat-Rear-Left (D501)
Module-Twin speed motor (D526)
VT,0.75,1575
C3PS180-7
PSA AFT/FOLD FLAT RECLINE
POWER FEED 1
PSA FORE/FOLD FLAT INCLINE
SQUAB MOTOR RECLINE
POWER FEED 2
SQUAB MOTOR INCLINE
LOGIC FEED
MS CAN H
MS CAN L
LIN
SQUAB MOTOR SENSE
LUMBAR H12
LUMBAR H11
LUMBAR L01
LUMBAR L02
GND
LUMBAR PUMP
PSA/FOLD FLAT GND
POWER GND 1
POWER GND 2
LOGIC GND
A
Sheet1
RD,2.5,3860
C3PS145D-6
B
Sheet1
BK,2.5,3860
C3PS145D-12
C
Sheet1
VT,0.75,1950
C3PS145D-14
S3DB33L
YE-VT,0.35,865
C3PS145B-15
S3DB34L
YE-OG,0.35,810
C3PS145B-16
D
Sheet1
WH,0.35,360
C33-Q2-22 C33-Q1-22
WH,0.35,2635
C3PS145B-8
Block valve-Lumbar-Rear-Left (D450)
C3PS104-2 YE-OG,0.5,1495
C33-Q2-20 C33-Q1-20
YE-OG,0.5,2640
C3PS145A-12
C3PS104-3 YE-BU,0.5,1495
C33-Q2-21 C33-Q1-21
YE-BU,0.5,2640
C3PS145A-25
C3PS104-4 VT-BN,0.5,1495
C33-Q2-18 C33-Q1-18
VT-BN,0.5,2640
C3PS145A-22
C3PS104-5 VT-OG,0.5,1535
C33-R2-10 C33-R1-10
VT-OG,0.5,2610
C3PS145A-9
Block valve-Lumbar-Rear-Left (D450)
C3PS112A-1 BN-GN,0.5,540
C33-Q2-10 C33-Q1-10
BN-GN,0.5,2640
C3PS145A-13
C3PS112A-3
G3D389-1
BK,0.5,950
C33-R1-9 C33-R2-9
BK,0.5,580
BK,2.5,1810
C3PS145D-8
BK,2.5,1810
C3PS145D-10
BK,0.5,1810
C3PS145D-11
G3D362-1
BK,0.75,950
C33-R1-11 C33-R2-11
BK,0.75,555
E
Sheet1
BK,0.75,730
SP8476
BK,0.75,1190
F
Sheet1
BU-WH,0.35,3845
C3PS145A-19 VT-OG,0.35,3845
S3PS149
VT-OG,0.35,225
C33-R1-3 C33-R2-3
VT-OG,0.35,1740
C3PS180-2
C3PS145A-6 VT-GY,0.35,3845
S3PS148 VT-GY,0.35,170
C33-R1-13 C33-R2-13
VT-GY,0.35,1740
C3PS180-8
C3PS145C-8 WH-GN,1.0,2540
C33-R1-2 C33-R2-2
WH-GN,1.0,1740
C3PS180-1
C3PS145C-9 BN-WH,1.0,2540
C33-R1-4 C33-R2-4
BN-WH,1.0,1740
C3PS180-6
C3PS180-3
C3PS180-10
C3PS180-5
WH-GN,1.0,695
BN-WH,1.0,695
Motor-Backrest-Rear-Left (M418)
C3PS101A-1
C3PS101A-3
RECLINE
12.00 Amps
INCLINE
Sensor-Hall-effect (T263)
C3PS101A-2
C3PS101A-4
POS SENSE
SENSE GND
C3PS145A-3 GY-OG,0.35,2640
C33-Q1-11 C33-Q2-11
GY-OG,0.35,1360
C3PS145A-18 BN-GN,0.35,2640
C33-Q1-12 C33-Q2-12
BN-GN,0.5,1360
Switchpack-Rear seat-powerfold (S510)
VT-GY,0.35,3415
C3PS44-2
INCLINE
C3PS44-1
VT-OG,0.35,3365
C3PS44-3
GND
RECLINE
C3PS44-6
C3PS145A-17 RD,0.35,3610
S3PS171
RD,0.35,3610

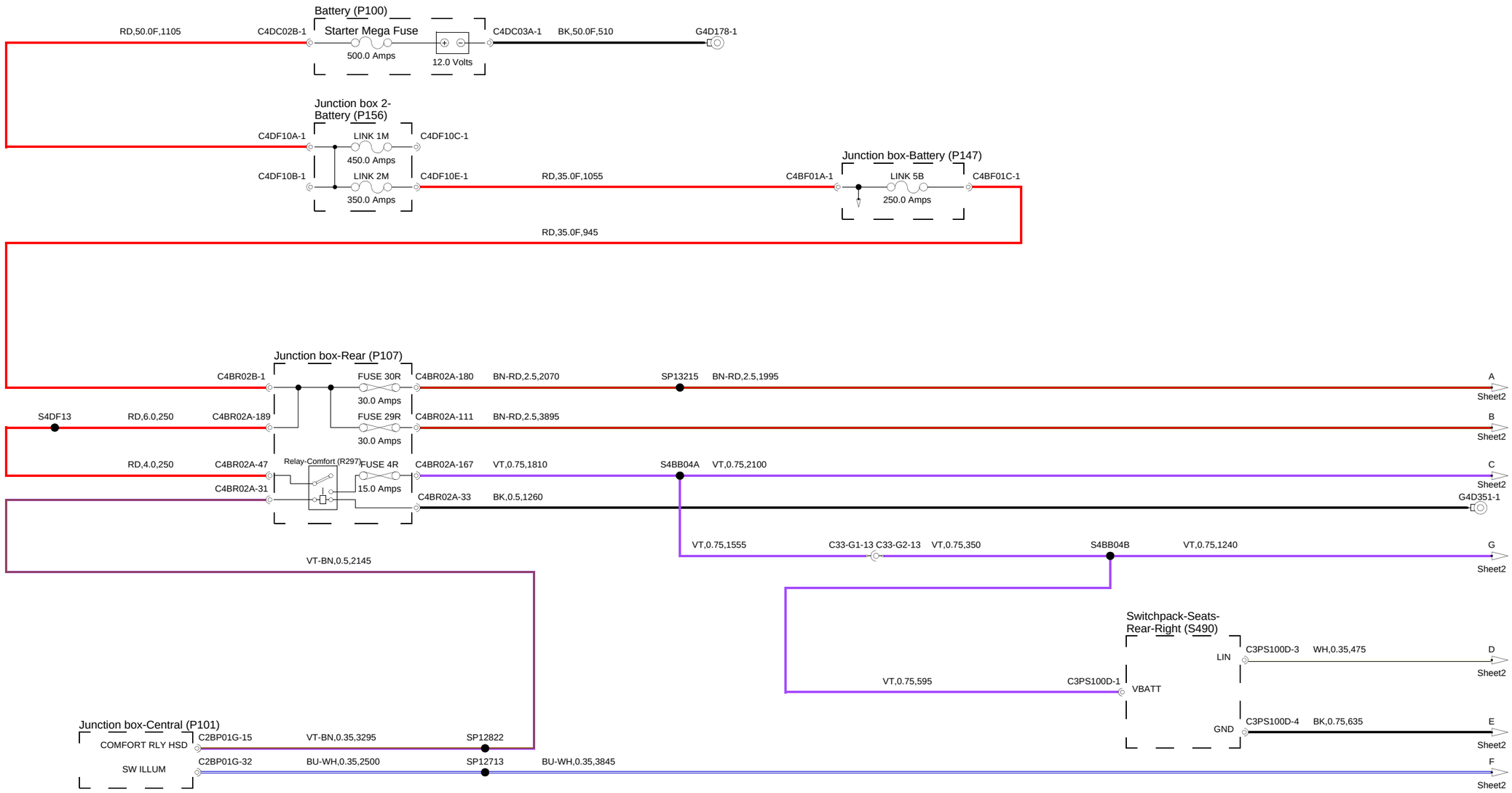
Battery (P100)
Starter Mega Fuse
500.0 Amps
12.0 Volts
RD,50.0F,1105
C4DC02B-1
C4DC03A-1
BK,50.0F,510
G4D178-1
Junction box 2-Battery (P156)
C4DF10A-1
LINK 1M
450.0 Amps
C4DF10C-1
C4DF10B-1
LINK 2M
350.0 Amps
C4DF10E-1
RD,35.0F,1055
Junction box-Battery (P147)
C4BF01A-1
LINK 5B
250.0 Amps
C4BF01C-1
RD,35.0F,945
Junction box-Rear (P107)
C4BR02B-1
FUSE 30R
30.0 Amps
C4BR02A-180
BN-RD,2.5,2070
SP13215
BN-RD,2.5,1995
A
Sheet2
S4DF13
RD,6.0,250
C4BR02A-189
FUSE 29R
30.0 Amps
C4BR02A-111
BN-RD,2.5,3895
B
Sheet2
RD,4.0,250
C4BR02A-47
Relay-Comfort (R297)
FUSE 4R
15.0 Amps
C4BR02A-167
VT,0.75,1810
S4BB04A
VT,0.75,2100
C
Sheet2
C4BR02A-31
C4BR02A-33
BK,0.5,1260
G4D351-1
VT,0.75,1555
C33-G1-13 C33-G2-13
VT,0.75,350
S4BB04B
VT,0.75,1240
G
Sheet2
VT-BN,0.5,2145
Switchpack-Seats-Rear-Right (S490)
LIN
C3PS100D-3
WH,0.35,475
D
Sheet2
VT,0.75,595
C3PS100D-1
VBATT
GND
C3PS100D-4
BK,0.75,635
E
Sheet2
Junction box-Central (P101)
COMFORT RLY HSD
C2BP01G-15
VT-BN,0.35,3295
SP12822
SW ILLUM
C2BP01G-32
BU-WH,0.35,2500
SP12713
BU-WH,0.35,3845
F
Sheet2

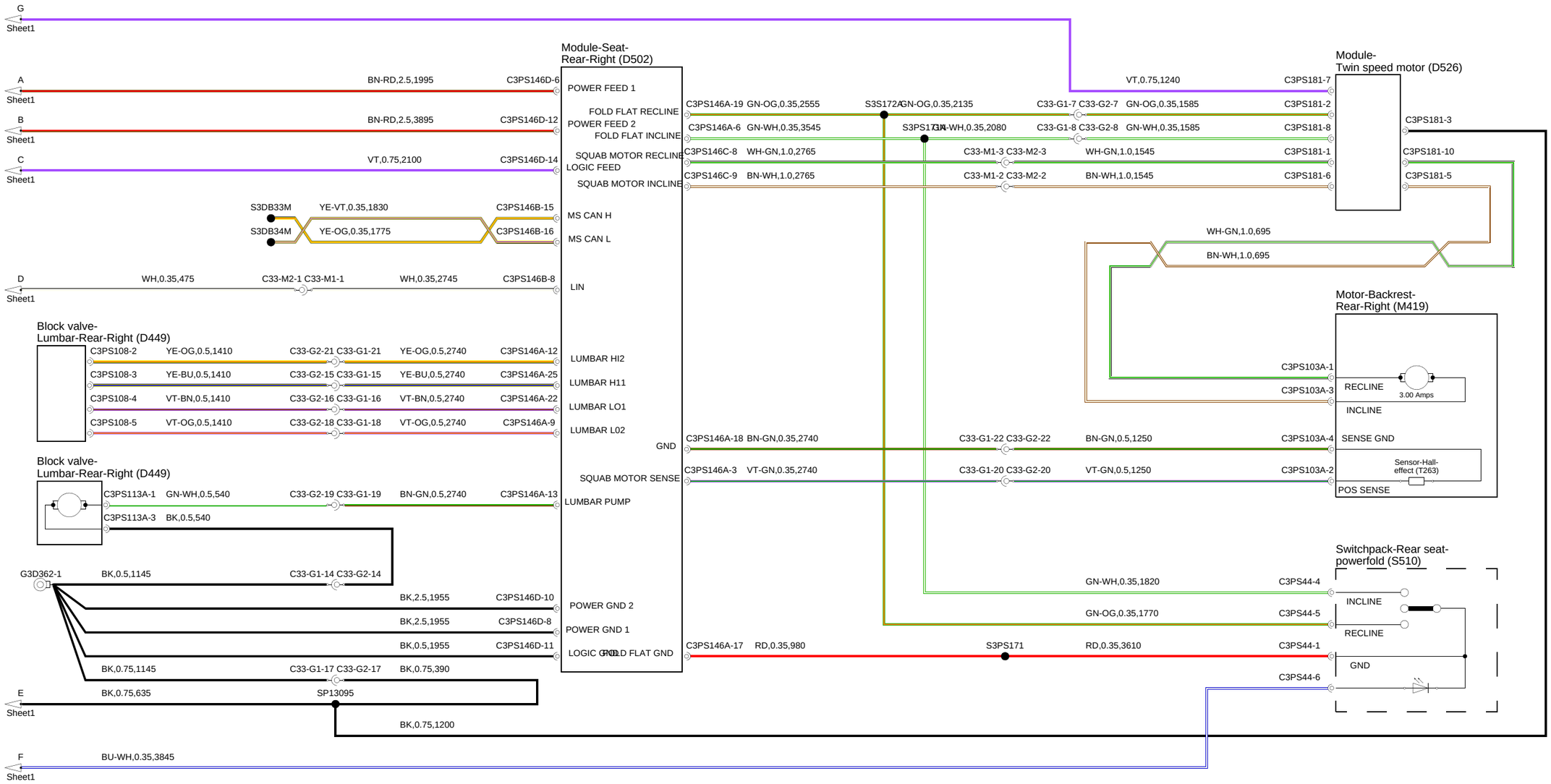
G
Sheet1
A
Sheet1
BN-RD,2.5,1995
C3PS146D-6
B
Sheet1
BN-RD,2.5,3895
C3PS146D-12
C
Sheet1
VT,0.75,2100
C3PS146D-14
S3DB33M
YE-VT,0.35,1830
C3PS146B-15
S3DB34M
YE-OG,0.35,1775
C3PS146B-16
D
Sheet1
WH,0.35,475
C33-M2-1 C33-M1-1
WH,0.35,2745
C3PS146B-8
Module-Seat-Rear-Right (D502)
POWER FEED 1
FOLD FLAT RECLINE
POWER FEED 2
FOLD FLAT INCLINE
SQUAB MOTOR RECLINE
LOGIC FEED
SQUAB MOTOR INCLINE
MS CAN H
MS CAN L
LIN
LUMBAR HI2
LUMBAR H11
LUMBAR LO1
LUMBAR L02
GND
SQUAB MOTOR SENSE
LUMBAR PUMP
POWER GND 2
POWER GND 1
LOGIC GND
FOLD FLAT GND
Block valve-Lumbar-Rear-Right (D449)
C3PS108-2
YE-OG,0.5,1410
C33-G2-21 C33-G1-21
YE-OG,0.5,2740
C3PS146A-12
C3PS108-3
YE-BU,0.5,1410
C33-G2-15 C33-G1-15
YE-BU,0.5,2740
C3PS146A-25
C3PS108-4
VT-BN,0.5,1410
C33-G2-16 C33-G1-16
VT-BN,0.5,2740
C3PS146A-22
C3PS108-5
VT-OG,0.5,1410
C33-G2-18 C33-G1-18
VT-OG,0.5,2740
C3PS146A-9
Block valve-Lumbar-Rear-Right (D449)
C3PS113A-1
GN-WH,0.5,540
C33-G2-19 C33-G1-19
BN-GN,0.5,2740
C3PS146A-13
C3PS113A-3
BK,0.5,540
G3D362-1
BK,0.5,1145
C33-G1-14 C33-G2-14
BK,2.5,1955
C3PS146D-10
BK,2.5,1955
C3PS146D-8
BK,0.5,1955
C3PS146D-11
BK,0.75,1145
C33-G1-17 C33-G2-17
BK,0.75,390
E
Sheet1
BK,0.75,635
SP13095
BK,0.75,1200
F
Sheet1
BU-WH,0.35,3845
C3PS146A-19
GN-OG,0.35,2555
S3S172A
GN-OG,0.35,2135
C33-G1-7 C33-G2-7
GN-OG,0.35,1585
C3PS146A-6
GN-WH,0.35,3545
S3PS172A
GN-WH,0.35,2080
C33-G1-8 C33-G2-8
GN-WH,0.35,1585
C3PS146C-8
WH-GN,1.0,2765
C33-M1-3 C33-M2-3
WH-GN,1.0,1545
C3PS146C-9
BN-WH,1.0,2765
C33-M1-2 C33-M2-2
BN-WH,1.0,1545
C3PS146A-18
BN-GN,0.35,2740
C33-G1-22 C33-G2-22
BN-GN,0.5,1250
C3PS146A-3
VT-GN,0.35,2740
C33-G1-20 C33-G2-20
VT-GN,0.5,1250
C3PS146A-17
RD,0.35,980
S3PS171
RD,0.35,3610
Module-Twin speed motor (D526)
VT,0.75,1240
C3PS181-7
C3PS181-2
C3PS181-8
C3PS181-1
C3PS181-6
C3PS181-3
C3PS181-10
C3PS181-5
WH-GN,1.0,695
BN-WH,1.0,695
Motor-Backrest-Rear-Right (M419)
C3PS103A-1
C3PS103A-3
RECLINE
3.00 Amps
INCLINE
C3PS103A-4
SENSE GND
C3PS103A-2
Sensor-Hall-effect (T263)
POS SENSE
Switchpack-Rear seat-powerfold (S510)
GN-WH,0.35,1820
C3PS44-4
INCLINE
GN-OG,0.35,1770
C3PS44-5
RECLINE
C3PS44-1
GND
C3PS44-6

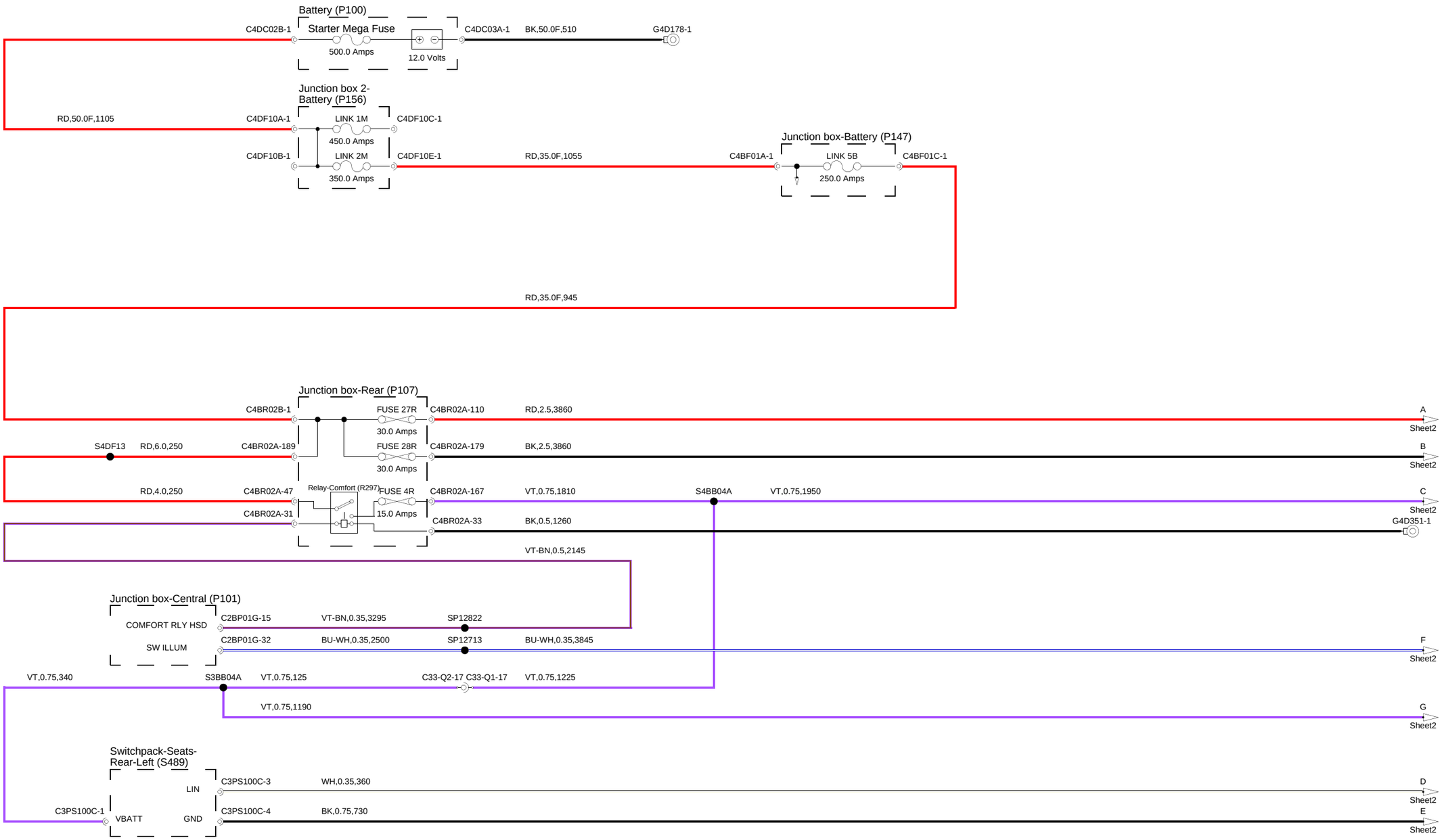
Battery (P100)
C4DC02B-1
Starter Mega Fuse
500.0 Amps
12.0 Volts
C4DC03A-1
BK,50.0F,510
G4D178-1
Junction box 2-
Battery (P156)
RD,50.0F,1105
C4DF10A-1
LINK 1M
450.0 Amps
C4DF10C-1
C4DF10B-1
LINK 2M
350.0 Amps
C4DF10E-1
RD,35.0F,1055
Junction box-Battery (P147)
C4BF01A-1
LINK 5B
250.0 Amps
C4BF01C-1
RD,35.0F,945
Junction box-Rear (P107)
C4BR02B-1
FUSE 27R
30.0 Amps
C4BR02A-110
RD,2.5,3860
A
Sheet2
S4DF13
RD,6.0,250
C4BR02A-189
FUSE 28R
30.0 Amps
C4BR02A-179
BK,2.5,3860
B
Sheet2
RD,4.0,250
C4BR02A-47
Relay-Comfort (R297)
FUSE 4R
15.0 Amps
C4BR02A-167
VT,0.75,1810
S4BB04A
VT,0.75,1950
C
Sheet2
C4BR02A-31
C4BR02A-33
BK,0.5,1260
G4D351-1
VT-BN,0.5,2145
Junction box-Central (P101)
COMFORT RLY HSD
C2BP01G-15
VT-BN,0.35,3295
SP12822
SW ILLUM
C2BP01G-32
BU-WH,0.35,2500
SP12713
BU-WH,0.35,3845
F
Sheet2
VT,0.75,340
S3BB04A
VT,0.75,125
C33-Q2-17 C33-Q1-17
VT,0.75,1225
VT,0.75,1190
G
Sheet2
Switchpack-Seats-
Rear-Left (S489)
LIN
C3PS100C-3
WH,0.35,360
D
Sheet2
C3PS100C-1
VBATT
GND
C3PS100C-4
BK,0.75,730
E
Sheet2

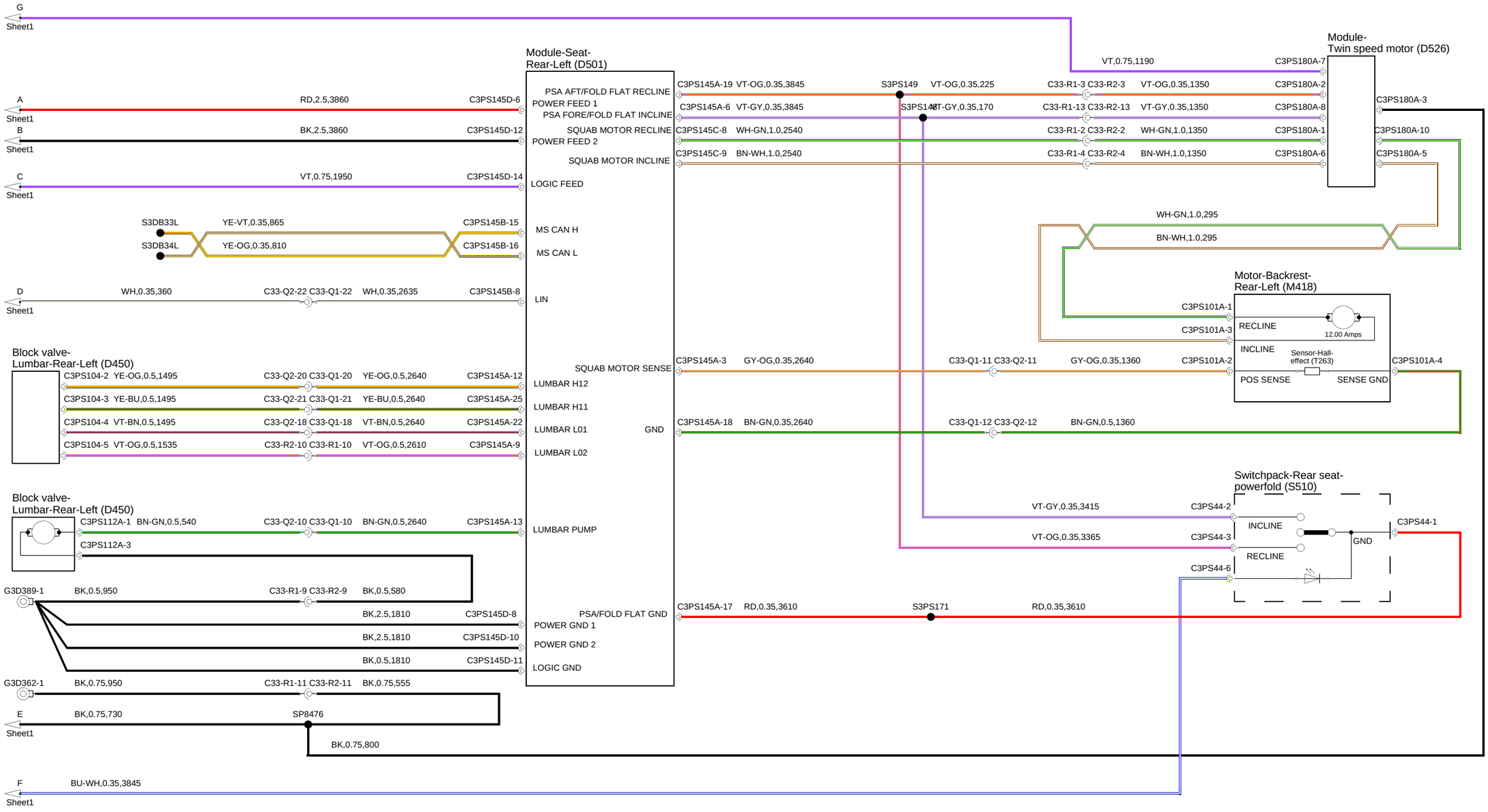
G
Sheet1
Module-Seat-Rear-Left (D501)
Module-Twin speed motor (D526)
VT,0.75,1190
C3PS180A-7
PSA AFT/FOLD FLAT RECLINE
POWER FEED 1
PSA FORE/FOLD FLAT INCLINE
SQUAB MOTOR RECLINE
POWER FEED 2
SQUAB MOTOR INCLINE
LOGIC FEED
A
Sheet1
RD,2.5,3860
C3PS145D-6
B
Sheet1
BK,2.5,3860
C3PS145D-12
C
Sheet1
VT,0.75,1950
C3PS145D-14
C3PS145A-19 VT-OG,0.35,3845
S3PS149
VT-OG,0.35,225
C33-R1-3 C33-R2-3
VT-OG,0.35,1350
C3PS180A-2
C3PS145A-6 VT-GY,0.35,3845
S3PS140
VT-GY,0.35,170
C33-R1-13 C33-R2-13
VT-GY,0.35,1350
C3PS180A-8
C3PS145C-8 WH-GN,1.0,2540
C33-R1-2 C33-R2-2
WH-GN,1.0,1350
C3PS180A-1
C3PS145C-9 BN-WH,1.0,2540
C33-R1-4 C33-R2-4
BN-WH,1.0,1350
C3PS180A-6
C3PS180A-3
C3PS180A-10
C3PS180A-5
S3DB33L
YE-VT,0.35,865
C3PS145B-15
MS CAN H
S3DB34L
YE-OG,0.35,810
C3PS145B-16
MS CAN L
WH-GN,1.0,295
BN-WH,1.0,295
D
Sheet1
WH,0.35,360
C33-Q2-22 C33-Q1-22
WH,0.35,2635
C3PS145B-8
LIN
Motor-Backrest-Rear-Left (M418)
C3PS101A-1
C3PS101A-3
RECLINE
12.00 Amps
INCLINE
Sensor-Hall-effect (T263)
POS SENSE
SENSE GND
C3PS101A-2
C3PS101A-4
Block valve-Lumbar-Rear-Left (D450)
C3PS104-2 YE-OG,0.5,1495
C33-Q2-20 C33-Q1-20
YE-OG,0.5,2640
C3PS145A-12
SQUAB MOTOR SENSE
LUMBAR H12
C3PS104-3 YE-BU,0.5,1495
C33-Q2-21 C33-Q1-21
YE-BU,0.5,2640
C3PS145A-25
LUMBAR H11
C3PS104-4 VT-BN,0.5,1495
C33-Q2-18 C33-Q1-18
VT-BN,0.5,2640
C3PS145A-22
LUMBAR L01
GND
C3PS104-5 VT-OG,0.5,1535
C33-R2-10 C33-R1-10
VT-OG,0.5,2610
C3PS145A-9
LUMBAR L02
C3PS145A-3 GY-OG,0.35,2640
C33-Q1-11 C33-Q2-11
GY-OG,0.35,1360
C3PS145A-18 BN-GN,0.35,2640
C33-Q1-12 C33-Q2-12
BN-GN,0.5,1360
Switchpack-Rear seat-powerfold (S510)
VT-GY,0.35,3415
C3PS44-2
INCLINE
C3PS44-1
VT-OG,0.35,3365
C3PS44-3
GND
RECLINE
C3PS44-6
Block valve-Lumbar-Rear-Left (D450)
C3PS112A-1 BN-GN,0.5,540
C33-Q2-10 C33-Q1-10
BN-GN,0.5,2640
C3PS145A-13
LUMBAR PUMP
C3PS112A-3
G3D389-1
BK,0.5,950
C33-R1-9 C33-R2-9
BK,0.5,580
BK,2.5,1810
C3PS145D-8
PSA/FOLD FLAT GND
POWER GND 1
BK,2.5,1810
C3PS145D-10
POWER GND 2
BK,0.5,1810
C3PS145D-11
LOGIC GND
C3PS145A-17 RD,0.35,3610
S3PS171
RD,0.35,3610
G3D362-1
BK,0.75,950
C33-R1-11 C33-R2-11
BK,0.75,555
E
Sheet1
BK,0.75,730
SP8476
BK,0.75,800
F
Sheet1
BU-WH,0.35,3845

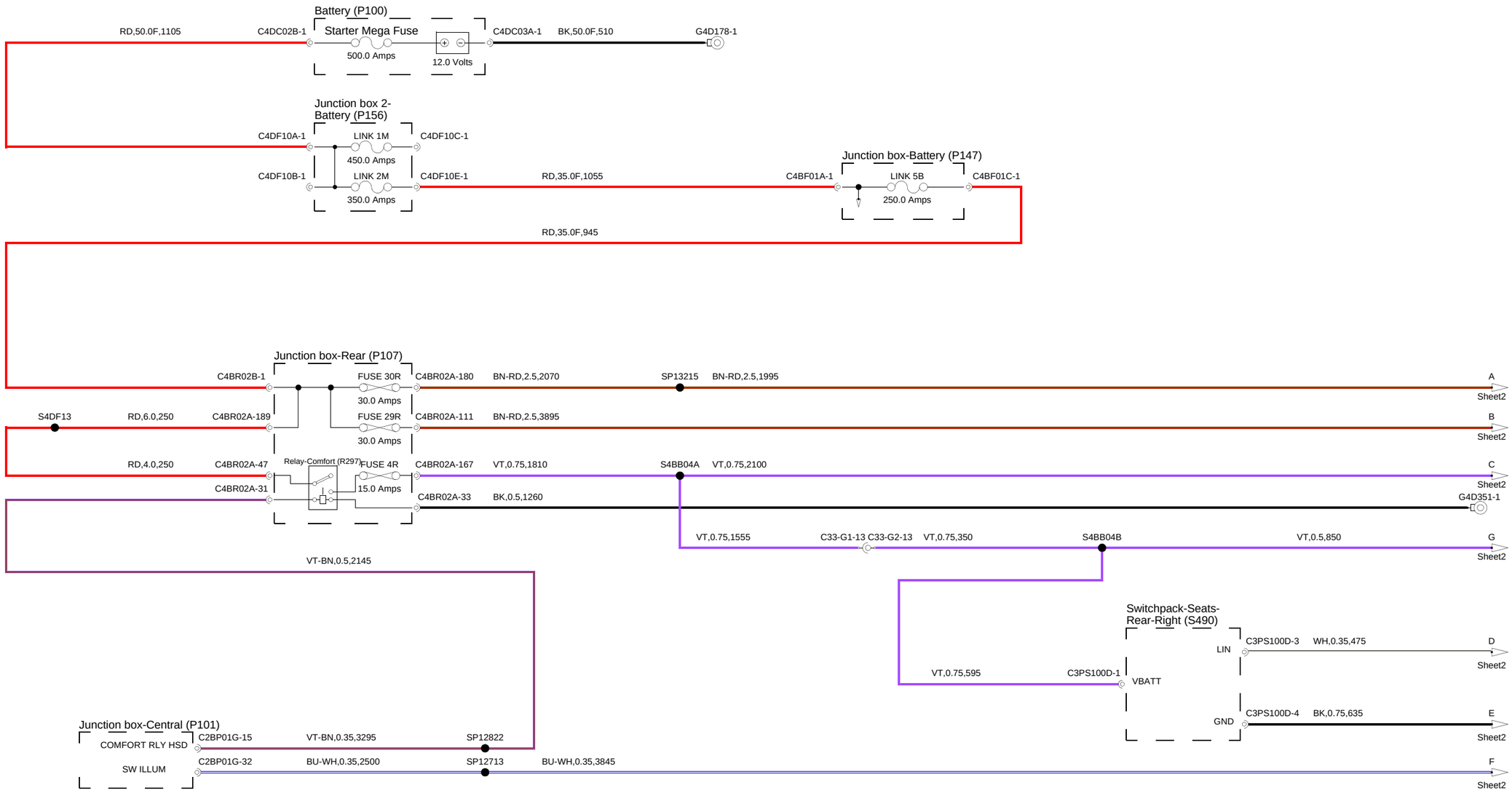
Battery (P100)
RD,50.0F,1105
C4DC02B-1
Starter Mega Fuse
500.0 Amps
12.0 Volts
C4DC03A-1
BK,50.0F,510
G4D178-1
Junction box 2-
Battery (P156)
C4DF10A-1
LINK 1M
C4DF10C-1
450.0 Amps
C4DF10B-1
LINK 2M
C4DF10E-1
350.0 Amps
RD,35.0F,1055
Junction box-Battery (P147)
C4BF01A-1
LINK 5B
C4BF01C-1
250.0 Amps
RD,35.0F,945
Junction box-Rear (P107)
C4BR02B-1
FUSE 30R
C4BR02A-180
BN-RD,2.5,2070
SP13215
BN-RD,2.5,1995
A
Sheet2
30.0 Amps
S4DF13
RD,6.0,250
C4BR02A-189
FUSE 29R
C4BR02A-111
BN-RD,2.5,3895
B
Sheet2
30.0 Amps
RD,4.0,250
C4BR02A-47
Relay-Comfort (R297)
FUSE 4R
C4BR02A-167
VT,0.75,1810
S4BB04A
VT,0.75,2100
C
Sheet2
C4BR02A-31
15.0 Amps
C4BR02A-33
BK,0.5,1260
G4D351-1
VT,0.75,1555
C33-G1-13 C33-G2-13
VT,0.75,350
S4BB04B
VT,0.5,850
G
Sheet2
VT-BN,0.5,2145
Switchpack-Seats-
Rear-Right (S490)
LIN
C3PS100D-3
WH,0.35,475
D
Sheet2
VT,0.75,595
C3PS100D-1
VBATT
GND
C3PS100D-4
BK,0.75,635
E
Sheet2
Junction box-Central (P101)
COMFORT RLY HSD
C2BP01G-15
VT-BN,0.35,3295
SP12822
SW ILLUM
C2BP01G-32
BU-WH,0.35,2500
SP12713
BU-WH,0.35,3845
F
Sheet2

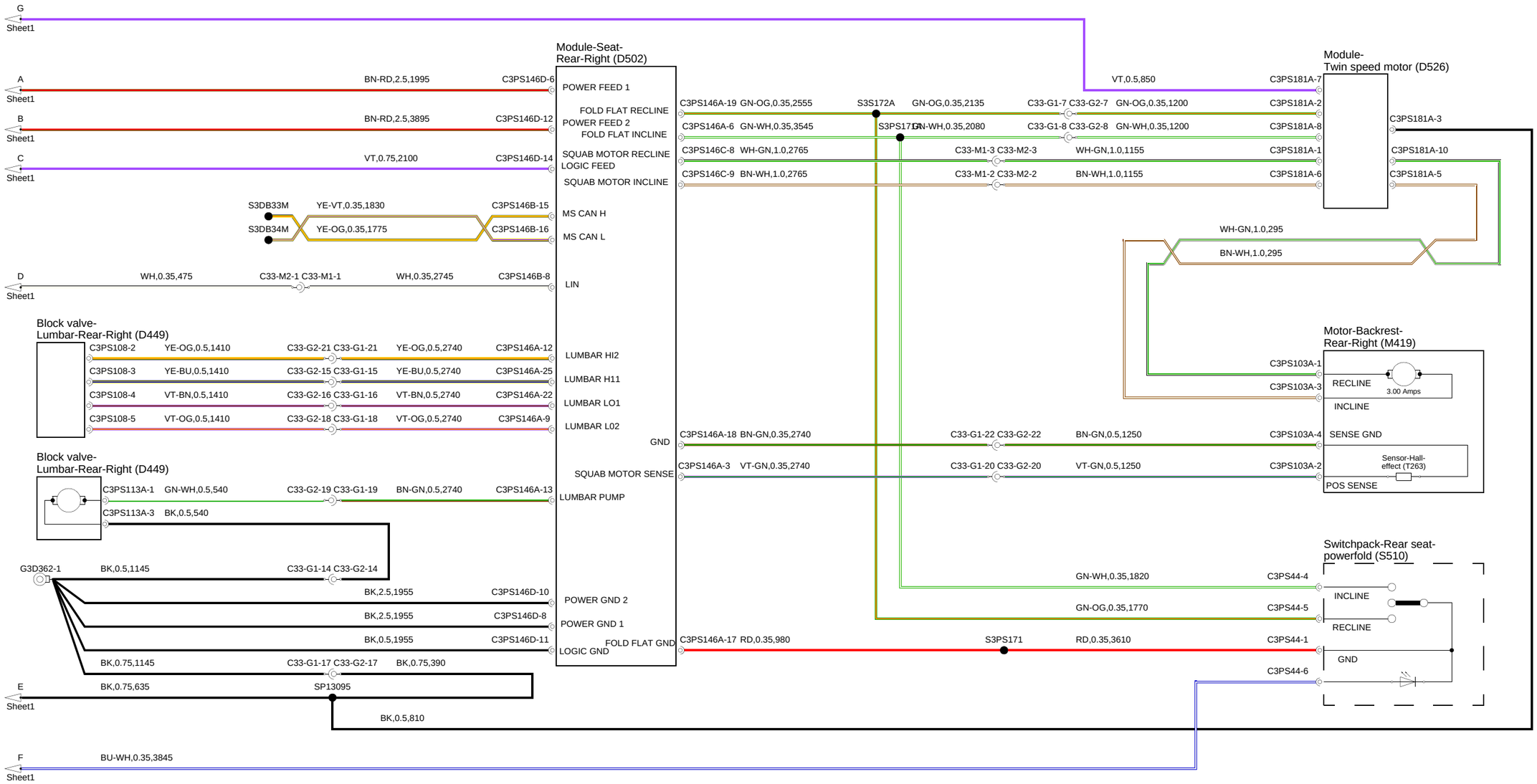
G
Sheet1
Module-Seat-Rear-Right (D502)
Module-Twin speed motor (D526)
A
BN-RD,2.5,1995
C3PS146D-6
POWER FEED 1
VT,0.5,850
C3PS181A-7
B
BN-RD,2.5,3895
C3PS146D-12
FOLD FLAT RECLINE
POWER FEED 2
FOLD FLAT INCLINE
C3PS146A-19 GN-OG,0.35,2555
S3S172A
GN-OG,0.35,2135
C33-G1-7 C33-G2-7
GN-OG,0.35,1200
C3PS181A-2
C3PS146A-6 GN-WH,0.35,3545
S3PS170
GN-WH,0.35,2080
C33-G1-8 C33-G2-8
GN-WH,0.35,1200
C3PS181A-8
C3PS181A-3
C
VT,0.75,2100
C3PS146D-14
SQUAB MOTOR RECLINE
LOGIC FEED
C3PS146C-8 WH-GN,1.0,2765
C33-M1-3 C33-M2-3
WH-GN,1.0,1155
C3PS181A-1
C3PS181A-10
SQUAB MOTOR INCLINE
C3PS146C-9 BN-WH,1.0,2765
C33-M1-2 C33-M2-2
BN-WH,1.0,1155
C3PS181A-6
C3PS181A-5
S3DB33M
YE-VT,0.35,1830
C3PS146B-15
MS CAN H
S3DB34M
YE-OG,0.35,1775
C3PS146B-16
MS CAN L
WH-GN,1.0,295
BN-WH,1.0,295
D
WH,0.35,475
C33-M2-1 C33-M1-1
WH,0.35,2745
C3PS146B-8
LIN
Block valve-Lumbar-Rear-Right (D449)
C3PS108-2 YE-OG,0.5,1410
C33-G2-21 C33-G1-21
YE-OG,0.5,2740
C3PS146A-12
LUMBAR HI2
C3PS108-3 YE-BU,0.5,1410
C33-G2-15 C33-G1-15
YE-BU,0.5,2740
C3PS146A-25
LUMBAR H11
C3PS108-4 VT-BN,0.5,1410
C33-G2-16 C33-G1-16
VT-BN,0.5,2740
C3PS146A-22
LUMBAR LO1
C3PS108-5 VT-OG,0.5,1410
C33-G2-18 C33-G1-18
VT-OG,0.5,2740
C3PS146A-9
LUMBAR L02
Motor-Backrest-Rear-Right (M419)
C3PS103A-1
RECLINE
3.00 Amps
C3PS103A-3
INCLINE
GND
C3PS146A-18 BN-GN,0.35,2740
C33-G1-22 C33-G2-22
BN-GN,0.5,1250
C3PS103A-4
SENSE GND
Block valve-Lumbar-Rear-Right (D449)
SQUAB MOTOR SENSE
C3PS146A-3 VT-GN,0.35,2740
C33-G1-20 C33-G2-20
VT-GN,0.5,1250
C3PS103A-2
Sensor-Hall-effect (T263)
POS SENSE
C3PS113A-1 GN-WH,0.5,540
C33-G2-19 C33-G1-19
BN-GN,0.5,2740
C3PS146A-13
LUMBAR PUMP
C3PS113A-3 BK,0.5,540
Switchpack-Rear seat-powerfold (S510)
G3D362-1
BK,0.5,1145
C33-G1-14 C33-G2-14
GN-WH,0.35,1820
C3PS44-4
INCLINE
BK,2.5,1955
C3PS146D-10
POWER GND 2
GN-OG,0.35,1770
C3PS44-5
BK,2.5,1955
C3PS146D-8
POWER GND 1
RECLINE
BK,0.5,1955
C3PS146D-11
FOLD FLAT GND
C3PS146A-17 RD,0.35,980
S3PS171
RD,0.35,3610
C3PS44-1
LOGIC GND
GND
BK,0.75,1145
C33-G1-17 C33-G2-17
BK,0.75,390
C3PS44-6
E
BK,0.75,635
SP13095
Sheet1
BK,0.5,810
F
BU-WH,0.35,3845
Sheet1

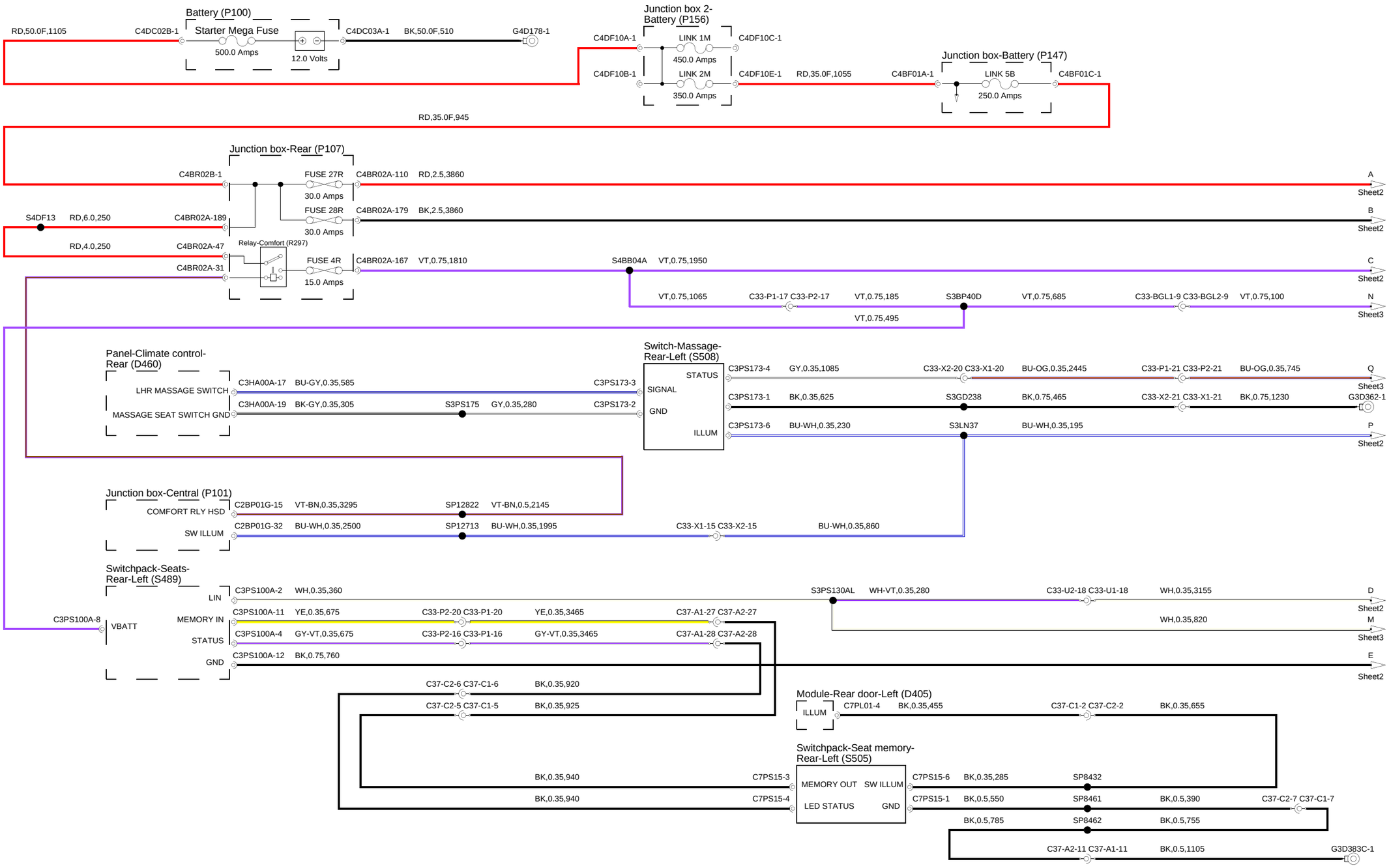
Battery (P100)
Starter Mega Fuse
500.0 Amps
12.0 Volts
RD,50.0F,1105
C4DC02B-1
C4DC03A-1
BK,50.0F,510
G4D178-1
Junction box 2-Battery (P156)
C4DF10A-1
LINK 1M
450.0 Amps
C4DF10C-1
C4DF10B-1
LINK 2M
350.0 Amps
C4DF10E-1
RD,35.0F,1055
Junction box-Battery (P147)
C4BF01A-1
LINK 5B
250.0 Amps
C4BF01C-1
RD,35.0F,945
Junction box-Rear (P107)
C4BR02B-1
FUSE 27R
30.0 Amps
C4BR02A-110
RD,2.5,3860
A
Sheet2
S4DF13
RD,6.0,250
C4BR02A-189
FUSE 28R
30.0 Amps
C4BR02A-179
BK,2.5,3860
B
Sheet2
RD,4.0,250
C4BR02A-47
Relay-Comfort (R297)
C4BR02A-31
FUSE 4R
15.0 Amps
C4BR02A-167
VT,0.75,1810
S4BB04A
VT,0.75,1950
C
Sheet2
VT,0.75,1065
C33-P1-17 C33-P2-17
VT,0.75,185
S3BP40D
VT,0.75,685
C33-BGL1-9 C33-BGL2-9
VT,0.75,100
N
Sheet3
VT,0.75,495
Panel-Climate control-Rear (D460)
LHR MASSAGE SWITCH
C3HA00A-17
BU-GY,0.35,585
C3PS173-3
MASSAGE SEAT SWITCH GND
C3HA00A-19
BK-GY,0.35,305
S3PS175
GY,0.35,280
C3PS173-2
Switch-Massage-Rear-Left (S508)
STATUS
SIGNAL
GND
ILLUM
C3PS173-4
GY,0.35,1085
C33-X2-20 C33-X1-20
BU-OG,0.35,2445
C33-P1-21 C33-P2-21
BU-OG,0.35,745
Q
Sheet3
C3PS173-1
BK,0.35,625
S3GD238
BK,0.75,465
C33-X2-21 C33-X1-21
BK,0.75,1230
G3D362-1
C3PS173-6
BU-WH,0.35,230
S3LN37
BU-WH,0.35,195
P
Sheet2
Junction box-Central (P101)
COMFORT RLY HSD
C2BP01G-15
VT-BN,0.35,3295
SP12822
VT-BN,0.5,2145
SW ILLUM
C2BP01G-32
BU-WH,0.35,2500
SP12713
BU-WH,0.35,1995
C33-X1-15 C33-X2-15
BU-WH,0.35,860
Switchpack-Seats-Rear-Left (S489)
LIN
C3PS100A-2
WH,0.35,360
S3PS130AL
WH-VT,0.35,280
C33-U2-18 C33-U1-18
WH,0.35,3155
D
Sheet2
C3PS100A-8
VBATT
MEMORY IN
C3PS100A-11
YE,0.35,675
C33-P2-20 C33-P1-20
YE,0.35,3465
C37-A1-27 C37-A2-27
WH,0.35,820
M
Sheet3
STATUS
C3PS100A-4
GY-VT,0.35,675
C33-P2-16 C33-P1-16
GY-VT,0.35,3465
C37-A1-28 C37-A2-28
GND
C3PS100A-12
BK,0.75,760
E
Sheet2
C37-C2-6 C37-C1-6
BK,0.35,920
C37-C2-5 C37-C1-5
BK,0.35,925
Module-Rear door-Left (D405)
ILLUM
C7PL01-4
BK,0.35,455
C37-C1-2 C37-C2-2
BK,0.35,655
Switchpack-Seat memory-Rear-Left (S505)
MEMORY OUT
SW ILLUM
LED STATUS
GND
BK,0.35,940
C7PS15-3
C7PS15-6
BK,0.35,285
SP8432
BK,0.35,940
C7PS15-4
C7PS15-1
BK,0.5,550
SP8461
BK,0.5,390
C37-C2-7 C37-C1-7
BK,0.5,785
SP8462
BK,0.5,755
C37-A2-11 C37-A1-11
BK,0.5,1105
G3D383C-1

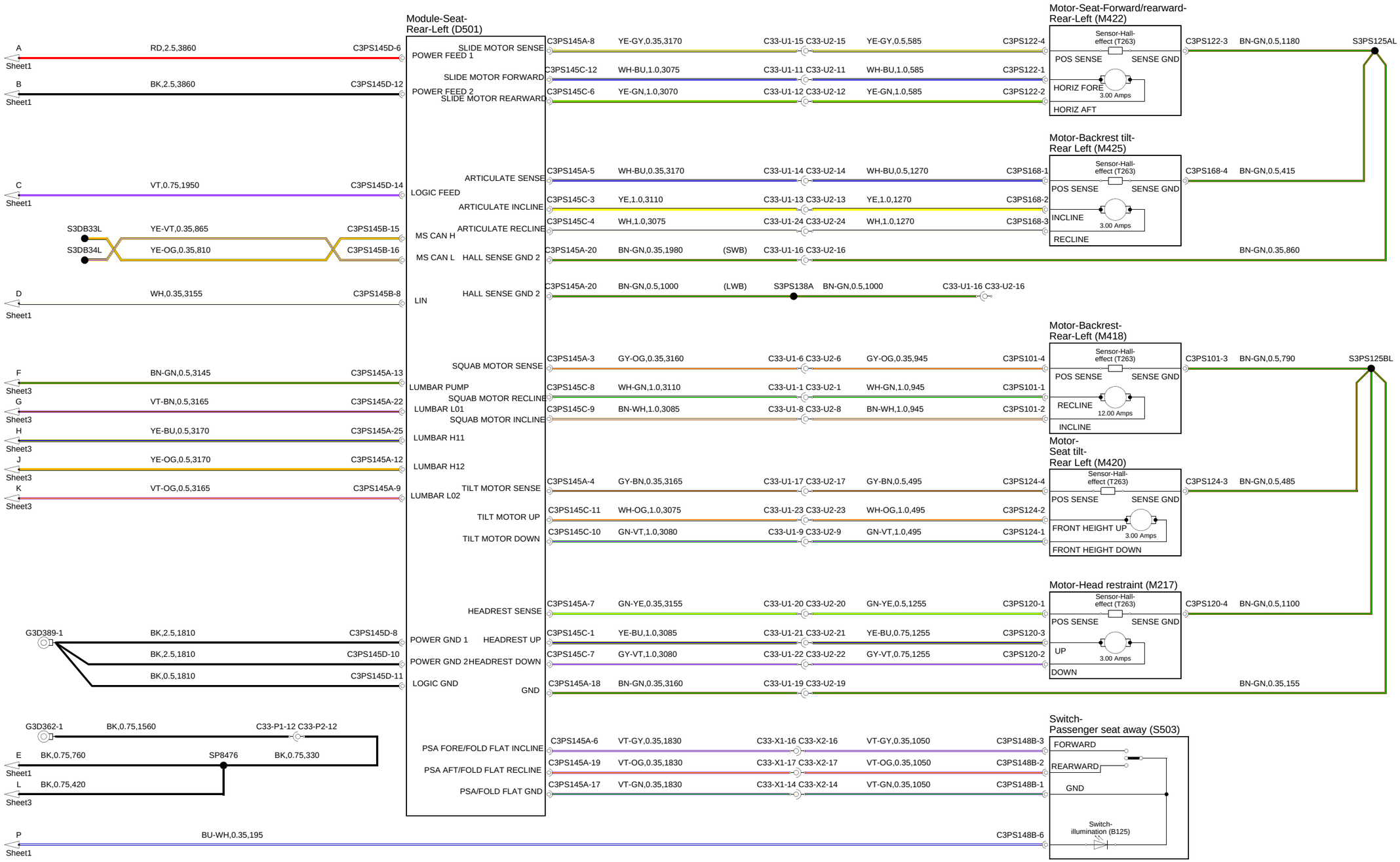
Module-Seat-Rear-Left (D501)
Motor-Seat-Forward/rearward-Rear-Left (M422)
Motor-Backrest tilt-Rear Left (M425)
Motor-Backrest-Rear-Left (M418)
Motor-Seat tilt-Rear Left (M420)
Motor-Head restraint (M217)
Switch-Passenger seat away (S503)
Sensor-Hall-effect (T263)
POS SENSE
SENSE GND
HORIZ FORE
HORIZ AFT
INCLINE
RECLINE
UP
DOWN
FRONT HEIGHT UP
FRONT HEIGHT DOWN
FORWARD
REARWARD
GND
Switch-illumination (B125)
3.00 Amps
12.00 Amps
A RD,2.5,3860 C3PS145D-6 Sheet1
B BK,2.5,3860 C3PS145D-12 Sheet1
C VT,0.75,1950 C3PS145D-14 Sheet1
S3DB33L YE-VT,0.35,865 C3PS145B-15
S3DB34L YE-OG,0.35,810 C3PS145B-16
D WH,0.35,3155 C3PS145B-8 Sheet1
F BN-GN,0.5,3145 C3PS145A-13 Sheet3
G VT-BN,0.5,3165 C3PS145A-22 Sheet3
H YE-BU,0.5,3170 C3PS145A-25 Sheet3
J YE-OG,0.5,3170 C3PS145A-12 Sheet3
K VT-OG,0.5,3165 C3PS145A-9 Sheet3
G3D389-1 BK,2.5,1810 C3PS145D-8
BK,2.5,1810 C3PS145D-10
BK,0.5,1810 C3PS145D-11
G3D362-1 BK,0.75,1560 C33-P1-12 C33-P2-12
E BK,0.75,760 SP8476 BK,0.75,330 Sheet1
L BK,0.75,420 Sheet3
P BU-WH,0.35,195 C3PS148B-6 Sheet1
SLIDE MOTOR SENSE
POWER FEED 1
SLIDE MOTOR FORWARD
POWER FEED 2
SLIDE MOTOR REARWARD
ARTICULATE SENSE
LOGIC FEED
ARTICULATE INCLINE
ARTICULATE RECLINE
MS CAN H
MS CAN L
HALL SENSE GND 2
HALL SENSE GND 2
LIN
SQUAB MOTOR SENSE
LUMBAR PUMP
SQUAB MOTOR RECLINE
LUMBAR L01
SQUAB MOTOR INCLINE
LUMBAR H11
LUMBAR H12
LUMBAR L02
TILT MOTOR SENSE
TILT MOTOR UP
TILT MOTOR DOWN
HEADREST SENSE
POWER GND 1
HEADREST UP
POWER GND 2
HEADREST DOWN
LOGIC GND
GND
PSA FORE/FOLD FLAT INCLINE
PSA AFT/FOLD FLAT RECLINE
PSA/FOLD FLAT GND
C3PS145A-8 YE-GY,0.35,3170 C33-U1-15 C33-U2-15 YE-GY,0.5,585 C3PS122-4
C3PS145C-12 WH-BU,1.0,3075 C33-U1-11 C33-U2-11 WH-BU,1.0,585 C3PS122-1
C3PS145C-6 YE-GN,1.0,3070 C33-U1-12 C33-U2-12 YE-GN,1.0,585 C3PS122-2
C3PS122-3 BN-GN,0.5,1180 S3PS125AL
C3PS145A-5 WH-BU,0.35,3170 C33-U1-14 C33-U2-14 WH-BU,0.5,1270 C3PS168-1
C3PS145C-3 YE,1.0,3110 C33-U1-13 C33-U2-13 YE,1.0,1270 C3PS168-2
C3PS145C-4 WH,1.0,3075 C33-U1-24 C33-U2-24 WH,1.0,1270 C3PS168-3
C3PS168-4 BN-GN,0.5,415
C3PS145A-20 BN-GN,0.35,1980 (SWB) C33-U1-16 C33-U2-16 BN-GN,0.35,860
C3PS145A-20 BN-GN,0.5,1000 (LWB) S3PS138A BN-GN,0.5,1000 C33-U1-16 C33-U2-16
C3PS145A-3 GY-OG,0.35,3160 C33-U1-6 C33-U2-6 GY-OG,0.35,945 C3PS101-4
C3PS145C-8 WH-GN,1.0,3110 C33-U1-1 C33-U2-1 WH-GN,1.0,945 C3PS101-1
C3PS145C-9 BN-WH,1.0,3085 C33-U1-8 C33-U2-8 BN-WH,1.0,945 C3PS101-2
C3PS101-3 BN-GN,0.5,790 S3PS125BL
C3PS145A-4 GY-BN,0.35,3165 C33-U1-17 C33-U2-17 GY-BN,0.5,495 C3PS124-4
C3PS145C-11 WH-OG,1.0,3075 C33-U1-23 C33-U2-23 WH-OG,1.0,495 C3PS124-2
C3PS145C-10 GN-VT,1.0,3080 C33-U1-9 C33-U2-9 GN-VT,1.0,495 C3PS124-1
C3PS124-3 BN-GN,0.5,485
C3PS145A-7 GN-YE,0.35,3155 C33-U1-20 C33-U2-20 GN-YE,0.5,1255 C3PS120-1
C3PS145C-1 YE-BU,1.0,3085 C33-U1-21 C33-U2-21 YE-BU,0.75,1255 C3PS120-3
C3PS145C-7 GY-VT,1.0,3080 C33-U1-22 C33-U2-22 GY-VT,0.75,1255 C3PS120-2
C3PS120-4 BN-GN,0.5,1100
C3PS145A-18 BN-GN,0.35,3160 C33-U1-19 C33-U2-19 BN-GN,0.35,155
C3PS145A-6 VT-GY,0.35,1830 C33-X1-16 C33-X2-16 VT-GY,0.35,1050 C3PS148B-3
C3PS145A-19 VT-OG,0.35,1830 C33-X1-17 C33-X2-17 VT-OG,0.35,1050 C3PS148B-2
C3PS145A-17 VT-GN,0.35,1830 C33-X1-14 C33-X2-14 VT-GN,0.35,1050 C3PS148B-1

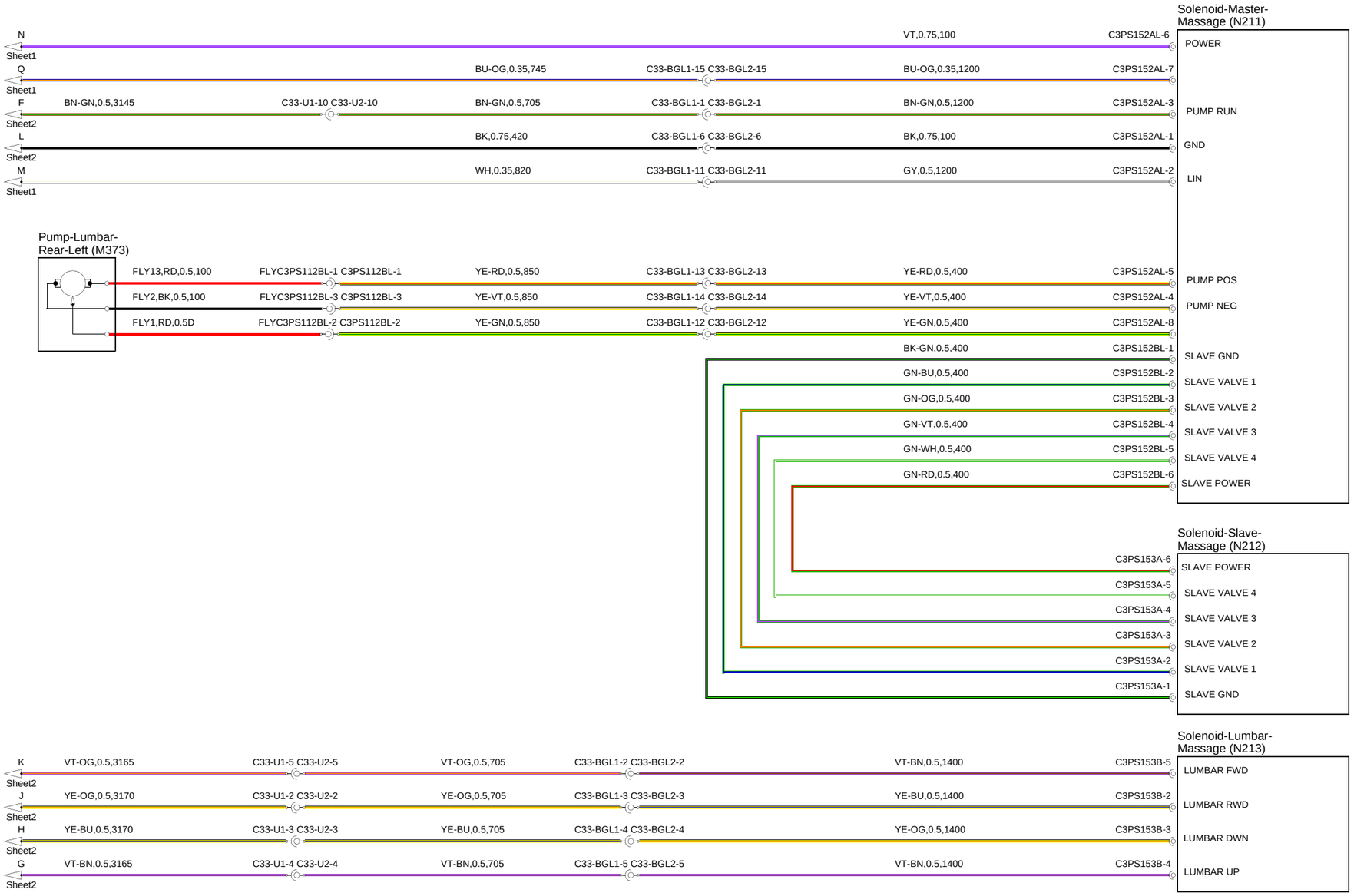
Solenoid-Master-Massage (N211)
N
Sheet1
VT,0.75,100
C3PS152AL-6
POWER
Q
Sheet1
BU-OG,0.35,745
C33-BGL1-15 C33-BGL2-15
BU-OG,0.35,1200
C3PS152AL-7
F
Sheet2
BN-GN,0.5,3145
C33-U1-10 C33-U2-10
BN-GN,0.5,705
C33-BGL1-1 C33-BGL2-1
BN-GN,0.5,1200
C3PS152AL-3
PUMP RUN
L
Sheet2
BK,0.75,420
C33-BGL1-6 C33-BGL2-6
BK,0.75,100
C3PS152AL-1
GND
M
Sheet1
WH,0.35,820
C33-BGL1-11 C33-BGL2-11
GY,0.5,1200
C3PS152AL-2
LIN
Pump-Lumbar-Rear-Left (M373)
FLY13,RD,0.5,100
FLYC3PS112BL-1 C3PS112BL-1
YE-RD,0.5,850
C33-BGL1-13 C33-BGL2-13
YE-RD,0.5,400
C3PS152AL-5
PUMP POS
FLY2,BK,0.5,100
FLYC3PS112BL-3 C3PS112BL-3
YE-VT,0.5,850
C33-BGL1-14 C33-BGL2-14
YE-VT,0.5,400
C3PS152AL-4
PUMP NEG
FLY1,RD,0.5D
FLYC3PS112BL-2 C3PS112BL-2
YE-GN,0.5,850
C33-BGL1-12 C33-BGL2-12
YE-GN,0.5,400
C3PS152AL-8
BK-GN,0.5,400
C3PS152BL-1
SLAVE GND
GN-BU,0.5,400
C3PS152BL-2
SLAVE VALVE 1
GN-OG,0.5,400
C3PS152BL-3
SLAVE VALVE 2
GN-VT,0.5,400
C3PS152BL-4
SLAVE VALVE 3
GN-WH,0.5,400
C3PS152BL-5
SLAVE VALVE 4
GN-RD,0.5,400
C3PS152BL-6
SLAVE POWER
Solenoid-Slave-Massage (N212)
C3PS153A-6
SLAVE POWER
C3PS153A-5
SLAVE VALVE 4
C3PS153A-4
SLAVE VALVE 3
C3PS153A-3
SLAVE VALVE 2
C3PS153A-2
SLAVE VALVE 1
C3PS153A-1
SLAVE GND
Solenoid-Lumbar-Massage (N213)
K
Sheet2
VT-OG,0.5,3165
C33-U1-5 C33-U2-5
VT-OG,0.5,705
C33-BGL1-2 C33-BGL2-2
VT-BN,0.5,1400
C3PS153B-5
LUMBAR FWD
J
Sheet2
YE-OG,0.5,3170
C33-U1-2 C33-U2-2
YE-OG,0.5,705
C33-BGL1-3 C33-BGL2-3
YE-BU,0.5,1400
C3PS153B-2
LUMBAR RWD
H
Sheet2
YE-BU,0.5,3170
C33-U1-3 C33-U2-3
YE-BU,0.5,705
C33-BGL1-4 C33-BGL2-4
YE-OG,0.5,1400
C3PS153B-3
LUMBAR DWN
G
Sheet2
VT-BN,0.5,3165
C33-U1-4 C33-U2-4
VT-BN,0.5,705
C33-BGL1-5 C33-BGL2-5
VT-BN,0.5,1400
C3PS153B-4
LUMBAR UP

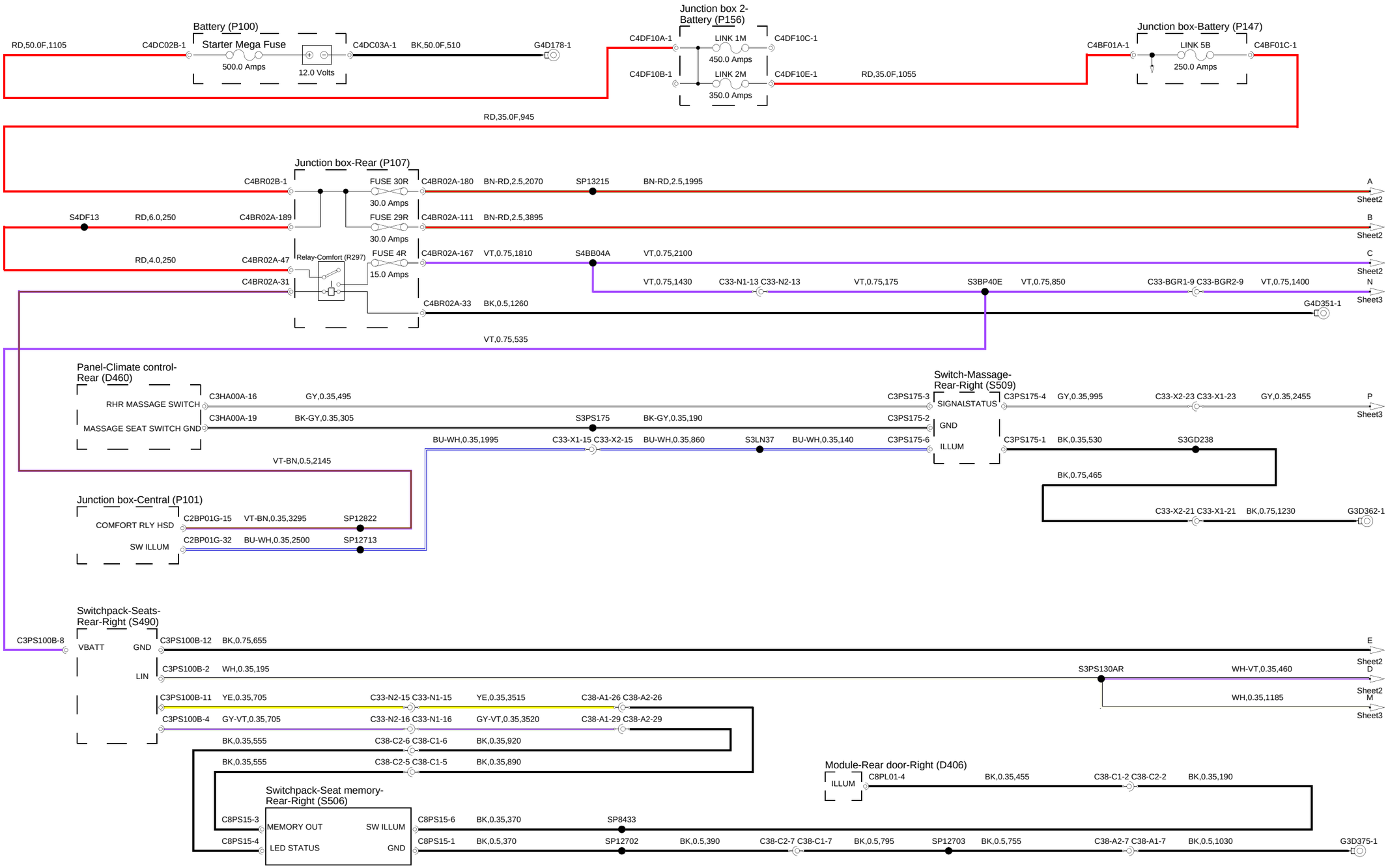
Battery (P100)
Starter Mega Fuse
500.0 Amps
12.0 Volts
RD,50.0F,1105
C4DC02B-1
C4DC03A-1
BK,50.0F,510
G4D178-1
Junction box 2-Battery (P156)
C4DF10A-1
LINK 1M
450.0 Amps
C4DF10C-1
C4DF10B-1
LINK 2M
350.0 Amps
C4DF10E-1
RD,35.0F,1055
Junction box-Battery (P147)
C4BF01A-1
LINK 5B
250.0 Amps
C4BF01C-1
RD,35.0F,945
Junction box-Rear (P107)
C4BR02B-1
FUSE 30R
30.0 Amps
C4BR02A-180
BN-RD,2.5,2070
SP13215
BN-RD,2.5,1995
A
Sheet2
S4DF13
RD,6.0,250
C4BR02A-189
FUSE 29R
30.0 Amps
C4BR02A-111
BN-RD,2.5,3895
B
Sheet2
RD,4.0,250
C4BR02A-47
Relay-Comfort (R297)
FUSE 4R
15.0 Amps
C4BR02A-167
VT,0.75,1810
S4BB04A
VT,0.75,2100
C
Sheet2
C4BR02A-31
VT,0.75,1430
C33-N1-13 C33-N2-13
VT,0.75,175
S3BP40E
VT,0.75,850
C33-BGR1-9 C33-BGR2-9
VT,0.75,1400
N
Sheet3
C4BR02A-33
BK,0.5,1260
G4D351-1
VT,0.75,535
Panel-Climate control-Rear (D460)
RHR MASSAGE SWITCH
C3HA00A-16
GY,0.35,495
C3PS175-3
Switch-Massage-Rear-Right (S509)
SIGNALSTATUS
C3PS175-4
GY,0.35,995
C33-X2-23 C33-X1-23
GY,0.35,2455
P
Sheet3
MASSAGE SEAT SWITCH GND
C3HA00A-19
BK-GY,0.35,305
S3PS175
BK-GY,0.35,190
C3PS175-2
GND
BU-WH,0.35,1995
C33-X1-15 C33-X2-15
BU-WH,0.35,860
S3LN37
BU-WH,0.35,140
C3PS175-6
ILLUM
C3PS175-1
BK,0.35,530
S3GD238
VT-BN,0.5,2145
BK,0.75,465
Junction box-Central (P101)
COMFORT RLY HSD
C2BP01G-15
VT-BN,0.35,3295
SP12822
C33-X2-21 C33-X1-21
BK,0.75,1230
G3D362-1
SW ILLUM
C2BP01G-32
BU-WH,0.35,2500
SP12713
Switchpack-Seats-Rear-Right (S490)
C3PS100B-8
VBATT
GND
C3PS100B-12
BK,0.75,655
E
Sheet2
LIN
C3PS100B-2
WH,0.35,195
S3PS130AR
WH-VT,0.35,460
D
Sheet2
WH,0.35,1185
M
Sheet3
C3PS100B-11
YE,0.35,705
C33-N2-15 C33-N1-15
YE,0.35,3515
C38-A1-26 C38-A2-26
C3PS100B-4
GY-VT,0.35,705
C33-N2-16 C33-N1-16
GY-VT,0.35,3520
C38-A1-29 C38-A2-29
BK,0.35,555
C38-C2-6 C38-C1-6
BK,0.35,920
BK,0.35,555
C38-C2-5 C38-C1-5
BK,0.35,890
Module-Rear door-Right (D406)
ILLUM
C8PL01-4
BK,0.35,455
C38-C1-2 C38-C2-2
BK,0.35,190
Switchpack-Seat memory-Rear-Right (S506)
C8PS15-3
MEMORY OUT
SW ILLUM
C8PS15-6
BK,0.35,370
SP8433
C8PS15-4
LED STATUS
GND
C8PS15-1
BK,0.5,370
SP12702
BK,0.5,390
C38-C2-7 C38-C1-7
BK,0.5,795
SP12703
BK,0.5,755
C38-A2-7 C38-A1-7
BK,0.5,1030
G3D375-1

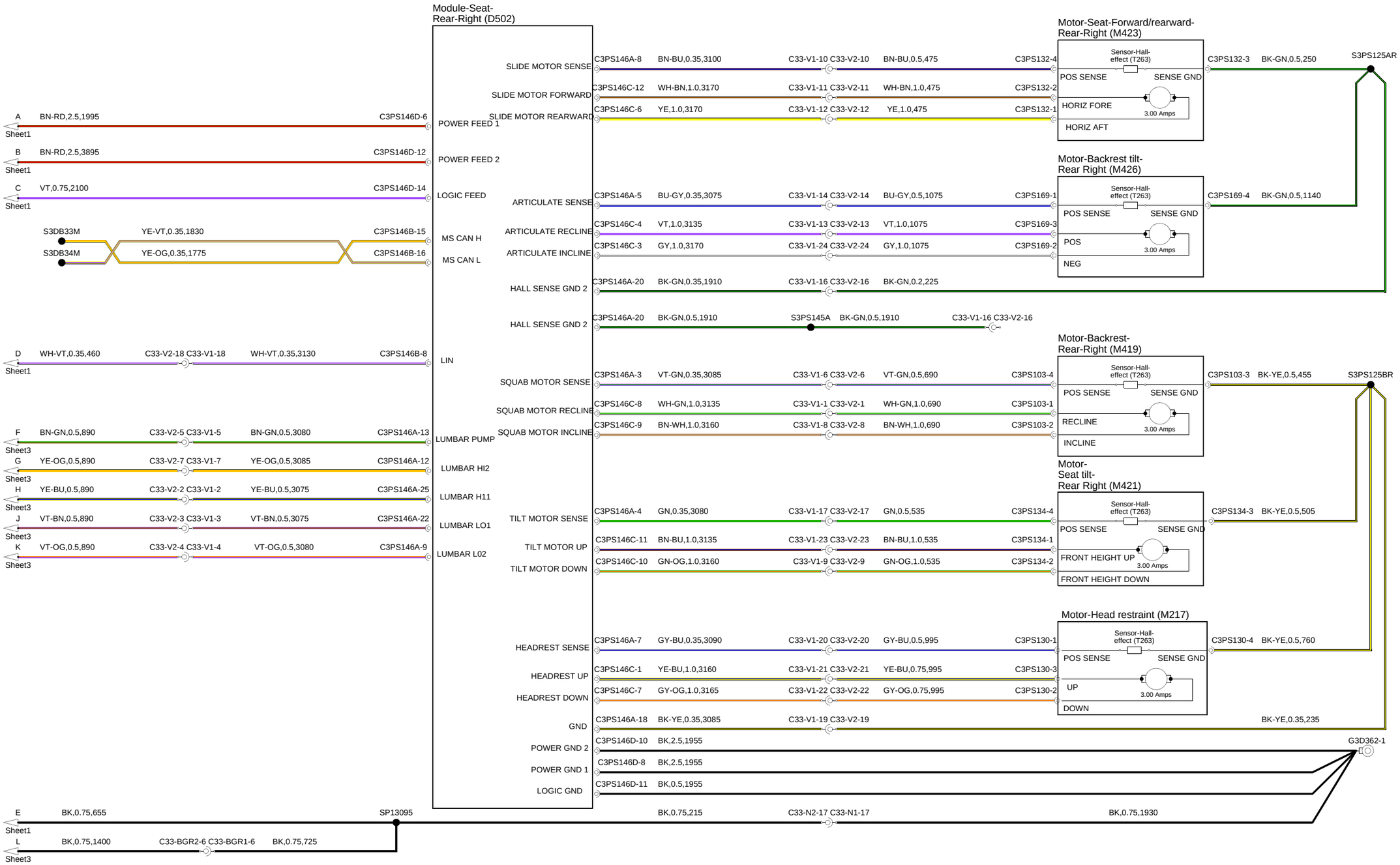
Module-Seat-Rear-Right (D502)
Motor-Seat-Forward/rearward-Rear-Right (M423)
Motor-Backrest tilt-Rear Right (M426)
Motor-Backrest-Rear-Right (M419)
Motor-Seat tilt-Rear Right (M421)
Motor-Head restraint (M217)
Sensor-Hall-effect (T263)
POS SENSE
SENSE GND
HORIZ FORE
HORIZ AFT
3.00 Amps
POS
NEG
RECLINE
INCLINE
FRONT HEIGHT UP
FRONT HEIGHT DOWN
UP
DOWN
SLIDE MOTOR SENSE
SLIDE MOTOR FORWARD
SLIDE MOTOR REARWARD
POWER FEED 1
POWER FEED 2
LOGIC FEED
ARTICULATE SENSE
ARTICULATE RECLINE
ARTICULATE INCLINE
MS CAN H
MS CAN L
HALL SENSE GND 2
LIN
SQUAB MOTOR SENSE
SQUAB MOTOR RECLINE
SQUAB MOTOR INCLINE
LUMBAR PUMP
LUMBAR HI2
LUMBAR H11
LUMBAR LO1
LUMBAR L02
TILT MOTOR SENSE
TILT MOTOR UP
TILT MOTOR DOWN
HEADREST SENSE
HEADREST UP
HEADREST DOWN
GND
POWER GND 2
POWER GND 1
LOGIC GND
A BN-RD,2.5,1995 C3PS146D-6 Sheet1
B BN-RD,2.5,3895 C3PS146D-12 Sheet1
C VT,0.75,2100 C3PS146D-14 Sheet1
S3DB33M YE-VT,0.35,1830 C3PS146B-15
S3DB34M YE-OG,0.35,1775 C3PS146B-16
D WH-VT,0.35,460 C33-V2-18 C33-V1-18 WH-VT,0.35,3130 C3PS146B-8 Sheet1
F BN-GN,0.5,890 C33-V2-5 C33-V1-5 BN-GN,0.5,3080 C3PS146A-13 Sheet3
G YE-OG,0.5,890 C33-V2-7 C33-V1-7 YE-OG,0.5,3085 C3PS146A-12 Sheet3
H YE-BU,0.5,890 C33-V2-2 C33-V1-2 YE-BU,0.5,3075 C3PS146A-25 Sheet3
J VT-BN,0.5,890 C33-V2-3 C33-V1-3 VT-BN,0.5,3075 C3PS146A-22 Sheet3
K VT-OG,0.5,890 C33-V2-4 C33-V1-4 VT-OG,0.5,3080 C3PS146A-9 Sheet3
E BK,0.75,655 SP13095 Sheet1
L BK,0.75,1400 C33-BGR2-6 C33-BGR1-6 BK,0.75,725 Sheet3
C3PS146A-8 BN-BU,0.35,3100 C33-V1-10 C33-V2-10 BN-BU,0.5,475 C3PS132-4
C3PS146C-12 WH-BN,1.0,3170 C33-V1-11 C33-V2-11 WH-BN,1.0,475 C3PS132-2
C3PS146C-6 YE,1.0,3170 C33-V1-12 C33-V2-12 YE,1.0,475 C3PS132-1
C3PS132-3 BK-GN,0.5,250 S3PS125AR
C3PS146A-5 BU-GY,0.35,3075 C33-V1-14 C33-V2-14 BU-GY,0.5,1075 C3PS169-1
C3PS146C-4 VT,1.0,3135 C33-V1-13 C33-V2-13 VT,1.0,1075 C3PS169-3
C3PS146C-3 GY,1.0,3170 C33-V1-24 C33-V2-24 GY,1.0,1075 C3PS169-2
C3PS169-4 BK-GN,0.5,1140
C3PS146A-20 BK-GN,0.35,1910 C33-V1-16 C33-V2-16 BK-GN,0.2,225
C3PS146A-20 BK-GN,0.5,1910 S3PS145A BK-GN,0.5,1910 C33-V1-16 C33-V2-16
C3PS146A-3 VT-GN,0.35,3085 C33-V1-6 C33-V2-6 VT-GN,0.5,690 C3PS103-4
C3PS146C-8 WH-GN,1.0,3135 C33-V1-1 C33-V2-1 WH-GN,1.0,690 C3PS103-1
C3PS146C-9 BN-WH,1.0,3160 C33-V1-8 C33-V2-8 BN-WH,1.0,690 C3PS103-2
C3PS103-3 BK-YE,0.5,455 S3PS125BR
C3PS146A-4 GN,0.35,3080 C33-V1-17 C33-V2-17 GN,0.5,535 C3PS134-4
C3PS146C-11 BN-BU,1.0,3135 C33-V1-23 C33-V2-23 BN-BU,1.0,535 C3PS134-1
C3PS146C-10 GN-OG,1.0,3160 C33-V1-9 C33-V2-9 GN-OG,1.0,535 C3PS134-2
C3PS134-3 BK-YE,0.5,505
C3PS146A-7 GY-BU,0.35,3090 C33-V1-20 C33-V2-20 GY-BU,0.5,995 C3PS130-1
C3PS146C-1 YE-BU,1.0,3160 C33-V1-21 C33-V2-21 YE-BU,0.75,995 C3PS130-3
C3PS146C-7 GY-OG,1.0,3165 C33-V1-22 C33-V2-22 GY-OG,0.75,995 C3PS130-2
C3PS130-4 BK-YE,0.5,760
C3PS146A-18 BK-YE,0.35,3085 C33-V1-19 C33-V2-19 BK-YE,0.35,235
C3PS146D-10 BK,2.5,1955
C3PS146D-8 BK,2.5,1955
C3PS146D-11 BK,0.5,1955
G3D362-1
BK,0.75,215 C33-N2-17 C33-N1-17 BK,0.75,1930

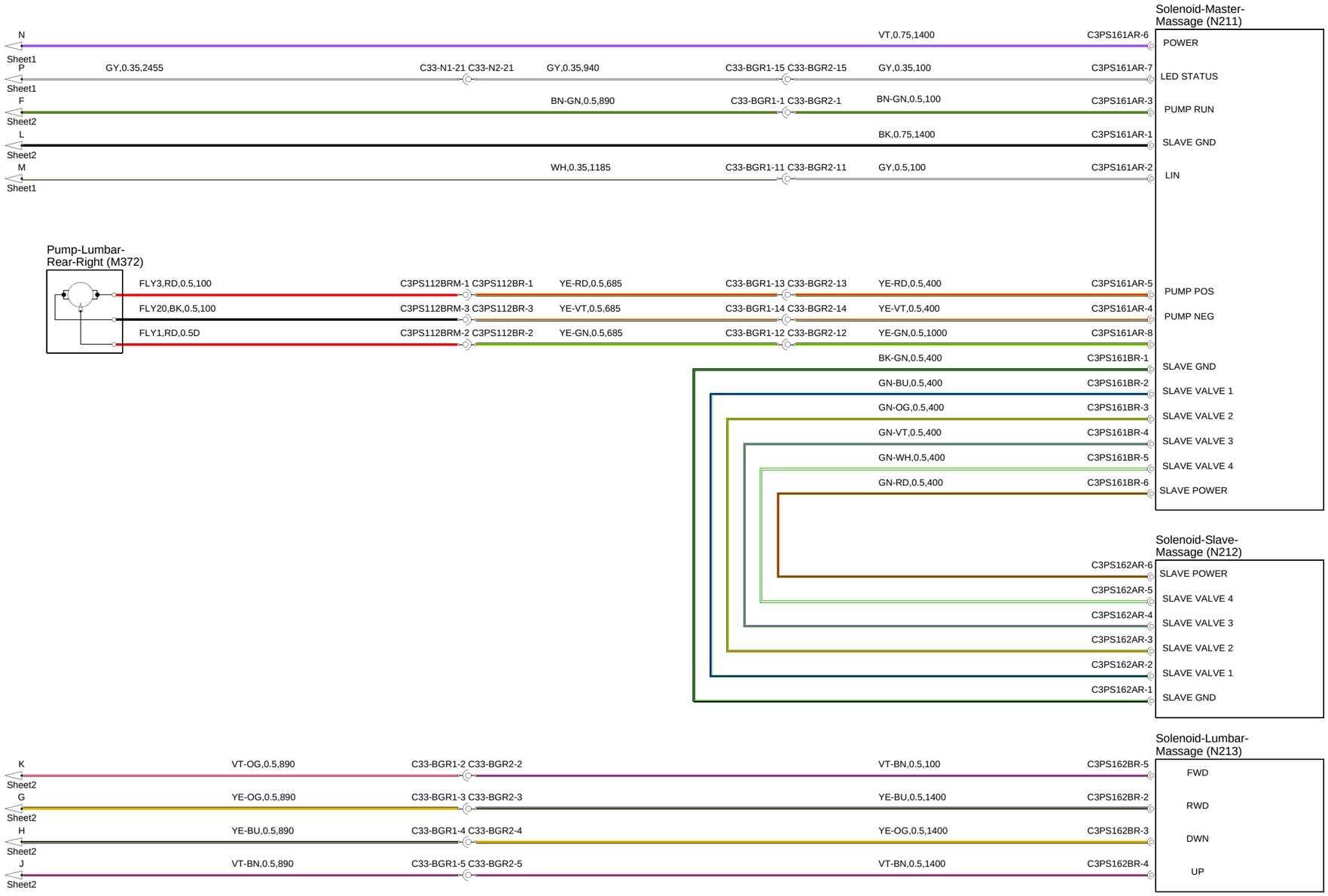
Solenoid-Master-Massage (N211)
N
Sheet1
VT,0.75,1400
C3PS161AR-6
POWER
P
Sheet1
GY,0.35,2455
C33-N1-21 C33-N2-21
GY,0.35,940
C33-BGR1-15 C33-BGR2-15
GY,0.35,100
C3PS161AR-7
LED STATUS
F
Sheet2
BN-GN,0.5,890
C33-BGR1-1 C33-BGR2-1
BN-GN,0.5,100
C3PS161AR-3
PUMP RUN
L
Sheet2
BK,0.75,1400
C3PS161AR-1
SLAVE GND
M
Sheet1
WH,0.35,1185
C33-BGR1-11 C33-BGR2-11
GY,0.5,100
C3PS161AR-2
LIN
Pump-Lumbar-Rear-Right (M372)
FLY3,RD,0.5,100
C3PS112BRM-1 C3PS112BR-1
YE-RD,0.5,685
C33-BGR1-13 C33-BGR2-13
YE-RD,0.5,400
C3PS161AR-5
PUMP POS
FLY20,BK,0.5,100
C3PS112BRM-3 C3PS112BR-3
YE-VT,0.5,685
C33-BGR1-14 C33-BGR2-14
YE-VT,0.5,400
C3PS161AR-4
PUMP NEG
FLY1,RD,0.5D
C3PS112BRM-2 C3PS112BR-2
YE-GN,0.5,685
C33-BGR1-12 C33-BGR2-12
YE-GN,0.5,1000
C3PS161AR-8
BK-GN,0.5,400
C3PS161BR-1
SLAVE GND
GN-BU,0.5,400
C3PS161BR-2
SLAVE VALVE 1
GN-OG,0.5,400
C3PS161BR-3
SLAVE VALVE 2
GN-VT,0.5,400
C3PS161BR-4
SLAVE VALVE 3
GN-WH,0.5,400
C3PS161BR-5
SLAVE VALVE 4
GN-RD,0.5,400
C3PS161BR-6
SLAVE POWER
Solenoid-Slave-Massage (N212)
C3PS162AR-6
SLAVE POWER
C3PS162AR-5
SLAVE VALVE 4
C3PS162AR-4
SLAVE VALVE 3
C3PS162AR-3
SLAVE VALVE 2
C3PS162AR-2
SLAVE VALVE 1
C3PS162AR-1
SLAVE GND
Solenoid-Lumbar-Massage (N213)
K
Sheet2
VT-OG,0.5,890
C33-BGR1-2 C33-BGR2-2
VT-BN,0.5,100
C3PS162BR-5
FWD
G
Sheet2
YE-OG,0.5,890
C33-BGR1-3 C33-BGR2-3
YE-BU,0.5,1400
C3PS162BR-2
RWD
H
Sheet2
YE-BU,0.5,890
C33-BGR1-4 C33-BGR2-4
YE-OG,0.5,1400
C3PS162BR-3
DWN
J
Sheet2
VT-BN,0.5,890
C33-BGR1-5 C33-BGR2-5
VT-BN,0.5,1400
C3PS162BR-4
UP

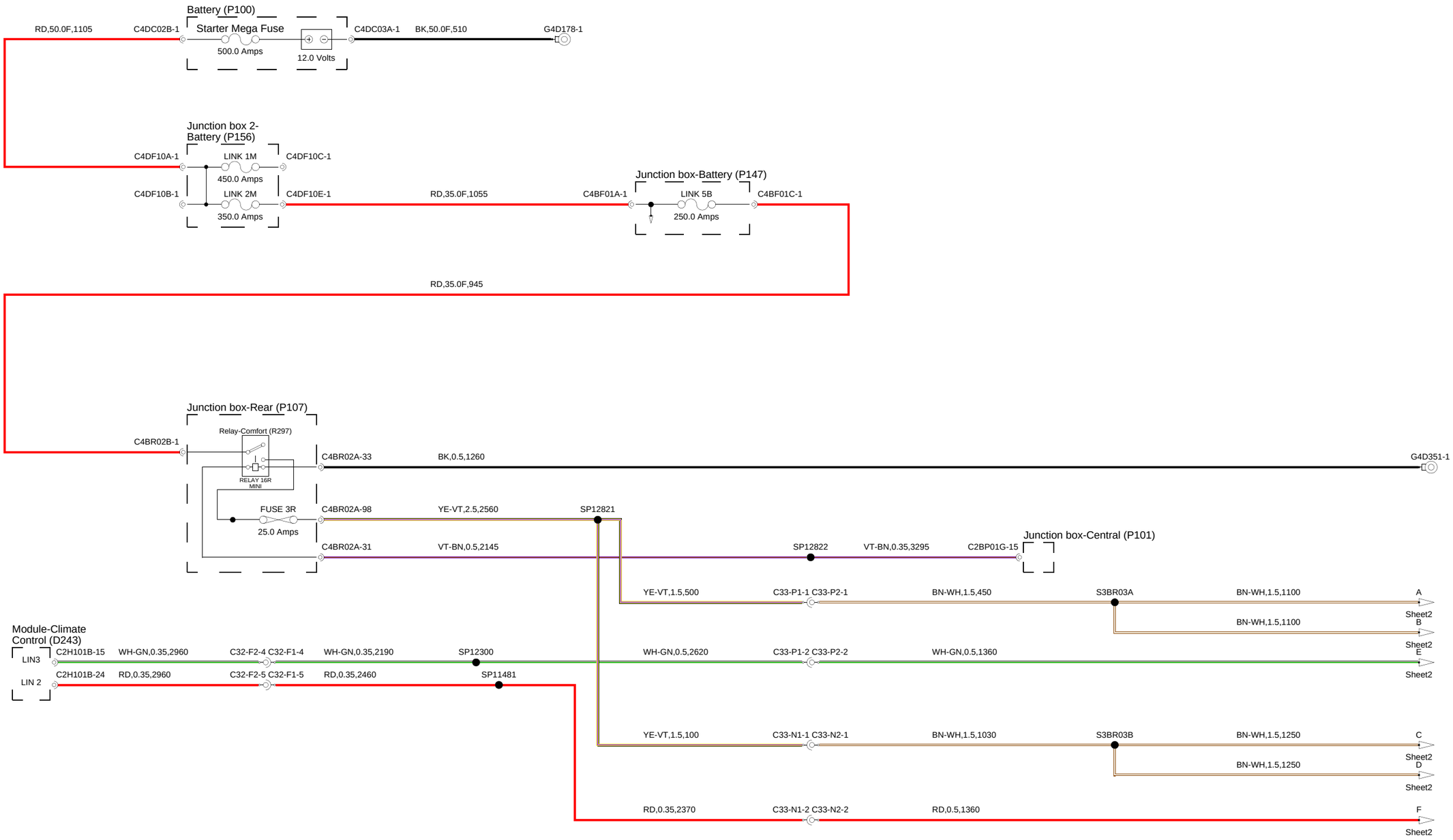
Battery (P100)
Starter Mega Fuse
500.0 Amps
12.0 Volts
RD,50.0F,1105
C4DC02B-1
C4DC03A-1
BK,50.0F,510
G4D178-1
Junction box 2-
Battery (P156)
C4DF10A-1
LINK 1M
450.0 Amps
C4DF10C-1
C4DF10B-1
LINK 2M
350.0 Amps
C4DF10E-1
RD,35.0F,1055
Junction box-Battery (P147)
C4BF01A-1
LINK 5B
250.0 Amps
C4BF01C-1
RD,35.0F,945
Junction box-Rear (P107)
Relay-Comfort (R297)
RELAY 16R
MINI
C4BR02B-1
C4BR02A-33
BK,0.5,1260
G4D351-1
FUSE 3R
25.0 Amps
C4BR02A-98
YE-VT,2.5,2560
SP12821
C4BR02A-31
VT-BN,0.5,2145
SP12822
VT-BN,0.35,3295
C2BP01G-15
Junction box-Central (P101)
YE-VT,1.5,500
C33-P1-1 C33-P2-1
BN-WH,1.5,450
S3BR03A
BN-WH,1.5,1100
A
Sheet2
BN-WH,1.5,1100
B
Sheet2
Module-Climate
Control (D243)
LIN3
C2H101B-15
WH-GN,0.35,2960
C32-F2-4 C32-F1-4
WH-GN,0.35,2190
SP12300
WH-GN,0.5,2620
C33-P1-2 C33-P2-2
WH-GN,0.5,1360
E
Sheet2
LIN 2
C2H101B-24
RD,0.35,2960
C32-F2-5 C32-F1-5
RD,0.35,2460
SP11481
YE-VT,1.5,100
C33-N1-1 C33-N2-1
BN-WH,1.5,1030
S3BR03B
BN-WH,1.5,1250
C
Sheet2
BN-WH,1.5,1250
D
Sheet2
RD,0.35,2370
C33-N1-2 C33-N2-2
RD,0.5,1360
F
Sheet2

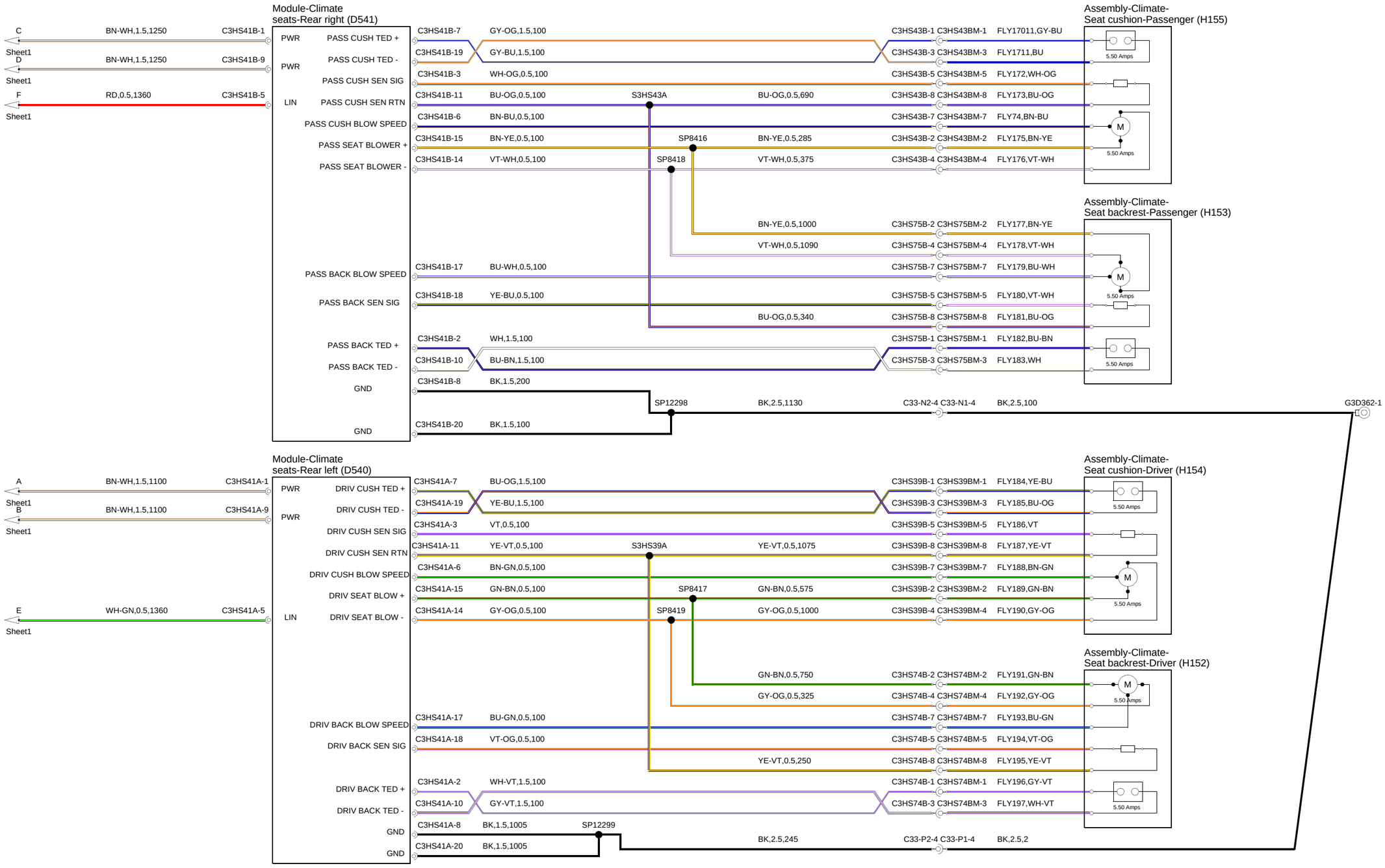
Module-Climate seats-Rear right (D541)
Module-Climate seats-Rear left (D540)
Assembly-Climate-Seat cushion-Passenger (H155)
Assembly-Climate-Seat backrest-Passenger (H153)
Assembly-Climate-Seat cushion-Driver (H154)
Assembly-Climate-Seat backrest-Driver (H152)
C BN-WH,1.5,1250 C3HS41B-1 Sheet1
D BN-WH,1.5,1250 C3HS41B-9 Sheet1
F RD,0.5,1360 C3HS41B-5 Sheet1
A BN-WH,1.5,1100 C3HS41A-1 Sheet1
B BN-WH,1.5,1100 C3HS41A-9 Sheet1
E WH-GN,0.5,1360 C3HS41A-5 Sheet1
PWR PASS CUSH TED + C3HS41B-7 GY-OG,1.5,100 C3HS43B-1 C3HS43BM-1 FLY17011,GY-BU
PWR PASS CUSH TED - C3HS41B-19 GY-BU,1.5,100 C3HS43B-3 C3HS43BM-3 FLY1711,BU
PASS CUSH SEN SIG C3HS41B-3 WH-OG,0.5,100 C3HS43B-5 C3HS43BM-5 FLY172,WH-OG
LIN PASS CUSH SEN RTN C3HS41B-11 BU-OG,0.5,100 S3HS43A BU-OG,0.5,690 C3HS43B-8 C3HS43BM-8 FLY173,BU-OG
PASS CUSH BLOW SPEED C3HS41B-6 BN-BU,0.5,100 C3HS43B-7 C3HS43BM-7 FLY74,BN-BU
PASS SEAT BLOWER + C3HS41B-15 BN-YE,0.5,100 SP8416 BN-YE,0.5,285 C3HS43B-2 C3HS43BM-2 FLY175,BN-YE
PASS SEAT BLOWER - C3HS41B-14 VT-WH,0.5,100 SP8418 VT-WH,0.5,375 C3HS43B-4 C3HS43BM-4 FLY176,VT-WH
BN-YE,0.5,1000 C3HS75B-2 C3HS75BM-2 FLY177,BN-YE
VT-WH,0.5,1090 C3HS75B-4 C3HS75BM-4 FLY178,VT-WH
PASS BACK BLOW SPEED C3HS41B-17 BU-WH,0.5,100 C3HS75B-7 C3HS75BM-7 FLY179,BU-WH
PASS BACK SEN SIG C3HS41B-18 YE-BU,0.5,100 C3HS75B-5 C3HS75BM-5 FLY180,VT-WH
BU-OG,0.5,340 C3HS75B-8 C3HS75BM-8 FLY181,BU-OG
PASS BACK TED + C3HS41B-2 WH,1.5,100 C3HS75B-1 C3HS75BM-1 FLY182,BU-BN
PASS BACK TED - C3HS41B-10 BU-BN,1.5,100 C3HS75B-3 C3HS75BM-3 FLY183,WH
GND C3HS41B-8 BK,1.5,200
SP12298 BK,2.5,1130 C33-N2-4 C33-N1-4 BK,2.5,100 G3D362-1
GND C3HS41B-20 BK,1.5,100
PWR DRIV CUSH TED + C3HS41A-7 BU-OG,1.5,100 C3HS39B-1 C3HS39BM-1 FLY184,YE-BU
PWR DRIV CUSH TED - C3HS41A-19 YE-BU,1.5,100 C3HS39B-3 C3HS39BM-3 FLY185,BU-OG
DRIV CUSH SEN SIG C3HS41A-3 VT,0.5,100 C3HS39B-5 C3HS39BM-5 FLY186,VT
DRIV CUSH SEN RTN C3HS41A-11 YE-VT,0.5,100 S3HS39A YE-VT,0.5,1075 C3HS39B-8 C3HS39BM-8 FLY187,YE-VT
DRIV CUSH BLOW SPEED C3HS41A-6 BN-GN,0.5,100 C3HS39B-7 C3HS39BM-7 FLY188,BN-GN
DRIV SEAT BLOW + C3HS41A-15 GN-BN,0.5,100 SP8417 GN-BN,0.5,575 C3HS39B-2 C3HS39BM-2 FLY189,GN-BN
LIN DRIV SEAT BLOW - C3HS41A-14 GY-OG,0.5,100 SP8419 GY-OG,0.5,1000 C3HS39B-4 C3HS39BM-4 FLY190,GY-OG
GN-BN,0.5,750 C3HS74B-2 C3HS74BM-2 FLY191,GN-BN
GY-OG,0.5,325 C3HS74B-4 C3HS74BM-4 FLY192,GY-OG
DRIV BACK BLOW SPEED C3HS41A-17 BU-GN,0.5,100 C3HS74B-7 C3HS74BM-7 FLY193,BU-GN
DRIV BACK SEN SIG C3HS41A-18 VT-OG,0.5,100 C3HS74B-5 C3HS74BM-5 FLY194,VT-OG
YE-VT,0.5,250 C3HS74B-8 C3HS74BM-8 FLY195,YE-VT
DRIV BACK TED + C3HS41A-2 WH-VT,1.5,100 C3HS74B-1 C3HS74BM-1 FLY196,GY-VT
DRIV BACK TED - C3HS41A-10 GY-VT,1.5,100 C3HS74B-3 C3HS74BM-3 FLY197,WH-VT
GND C3HS41A-8 BK,1.5,1005 SP12299 BK,2.5,245 C33-P2-4 C33-P1-4 BK,2.5,2
GND C3HS41A-20 BK,1.5,1005
5.50 Amps
M

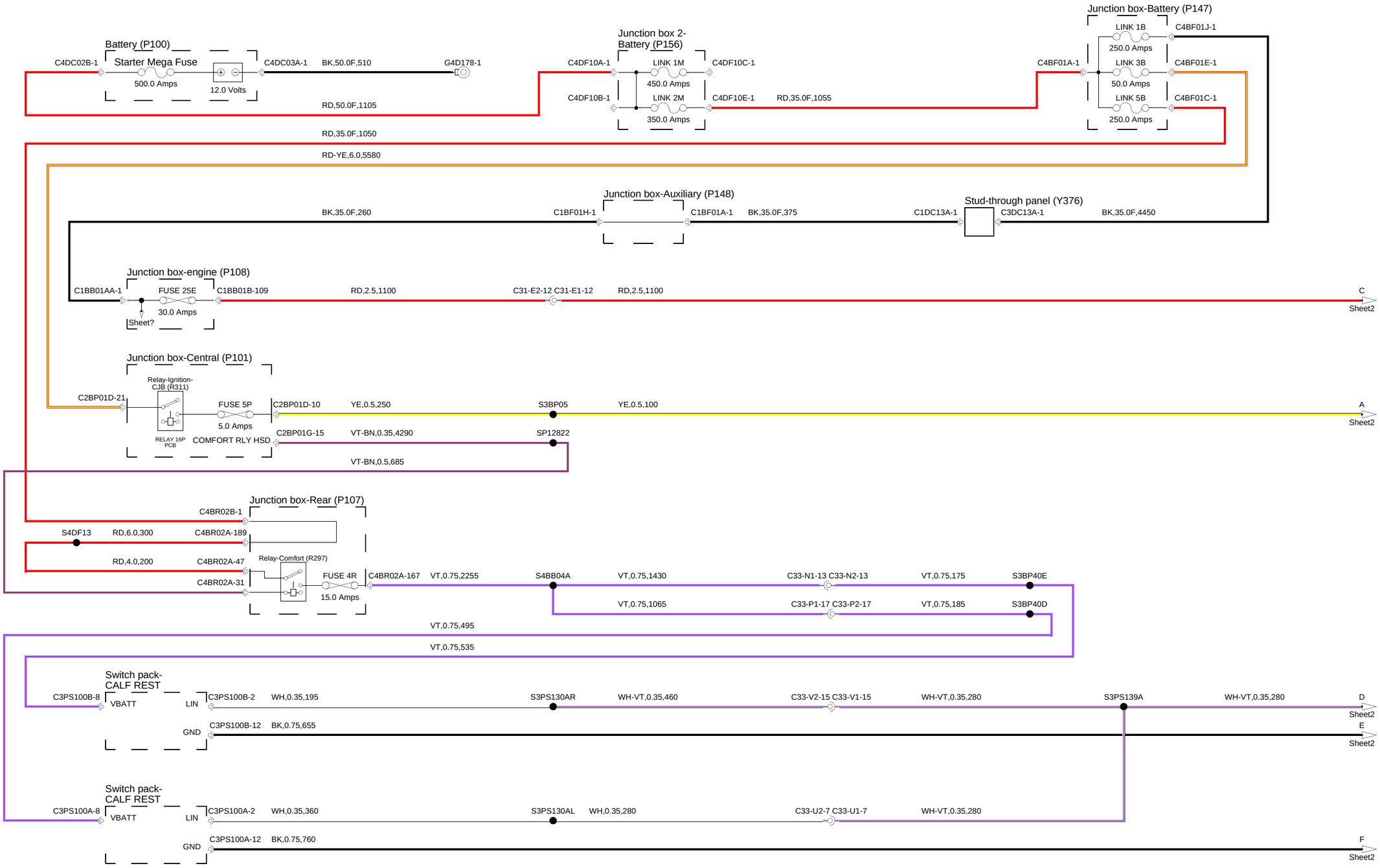
Battery (P100)
C4DC02B-1
Starter Mega Fuse
500.0 Amps
12.0 Volts
C4DC03A-1
BK,50.0F,510
G4D178-1
RD,50.0F,1105
Junction box 2-Battery (P156)
C4DF10A-1
LINK 1M
450.0 Amps
C4DF10C-1
C4DF10B-1
LINK 2M
350.0 Amps
C4DF10E-1
RD,35.0F,1055
Junction box-Battery (P147)
C4BF01A-1
LINK 1B
250.0 Amps
C4BF01J-1
LINK 3B
50.0 Amps
C4BF01E-1
LINK 5B
250.0 Amps
C4BF01C-1
RD,35.0F,1050
RD-YE,6.0,5580
Junction box-Auxiliary (P148)
BK,35.0F,260
C1BF01H-1
C1BF01A-1
BK,35.0F,375
Stud-through panel (Y376)
C1DC13A-1
C3DC13A-1
BK,35.0F,4450
Junction box-engine (P108)
C1BB01AA-1
FUSE 25E
30.0 Amps
Sheet?
C1BB01B-109
RD,2.5,1100
C31-E2-12 C31-E1-12
RD,2.5,1100
C
Sheet2
Junction box-Central (P101)
Relay-Ignition-CJB (R311)
C2BP01D-21
FUSE 5P
5.0 Amps
C2BP01D-10
YE,0.5,250
S3BP05
YE,0.5,100
A
Sheet2
RELAY 16P PCB
COMFORT RLY HSD
C2BP01G-15
VT-BN,0.35,4290
SP12822
VT-BN,0.5,685
Junction box-Rear (P107)
C4BR02B-1
S4DF13
RD,6.0,300
C4BR02A-189
RD,4.0,200
C4BR02A-47
C4BR02A-31
Relay-Comfort (R297)
FUSE 4R
15.0 Amps
C4BR02A-167
VT,0.75,2255
S4BB04A
VT,0.75,1430
C33-N1-13 C33-N2-13
VT,0.75,175
S3BP40E
VT,0.75,1065
C33-P1-17 C33-P2-17
VT,0.75,185
S3BP40D
VT,0.75,495
VT,0.75,535
Switch pack-CALF REST
C3PS100B-8
VBATT
LIN
C3PS100B-2
WH,0.35,195
S3PS130AR
WH-VT,0.35,460
C33-V2-15 C33-V1-15
WH-VT,0.35,280
S3PS139A
WH-VT,0.35,280
D
Sheet2
GND
C3PS100B-12
BK,0.75,655
E
Sheet2
Switch pack-CALF REST
C3PS100A-8
VBATT
LIN
C3PS100A-2
WH,0.35,360
S3PS130AL
WH,0.35,280
C33-U2-7 C33-U1-7
WH-VT,0.35,280
GND
C3PS100A-12
BK,0.75,760
F
Sheet2

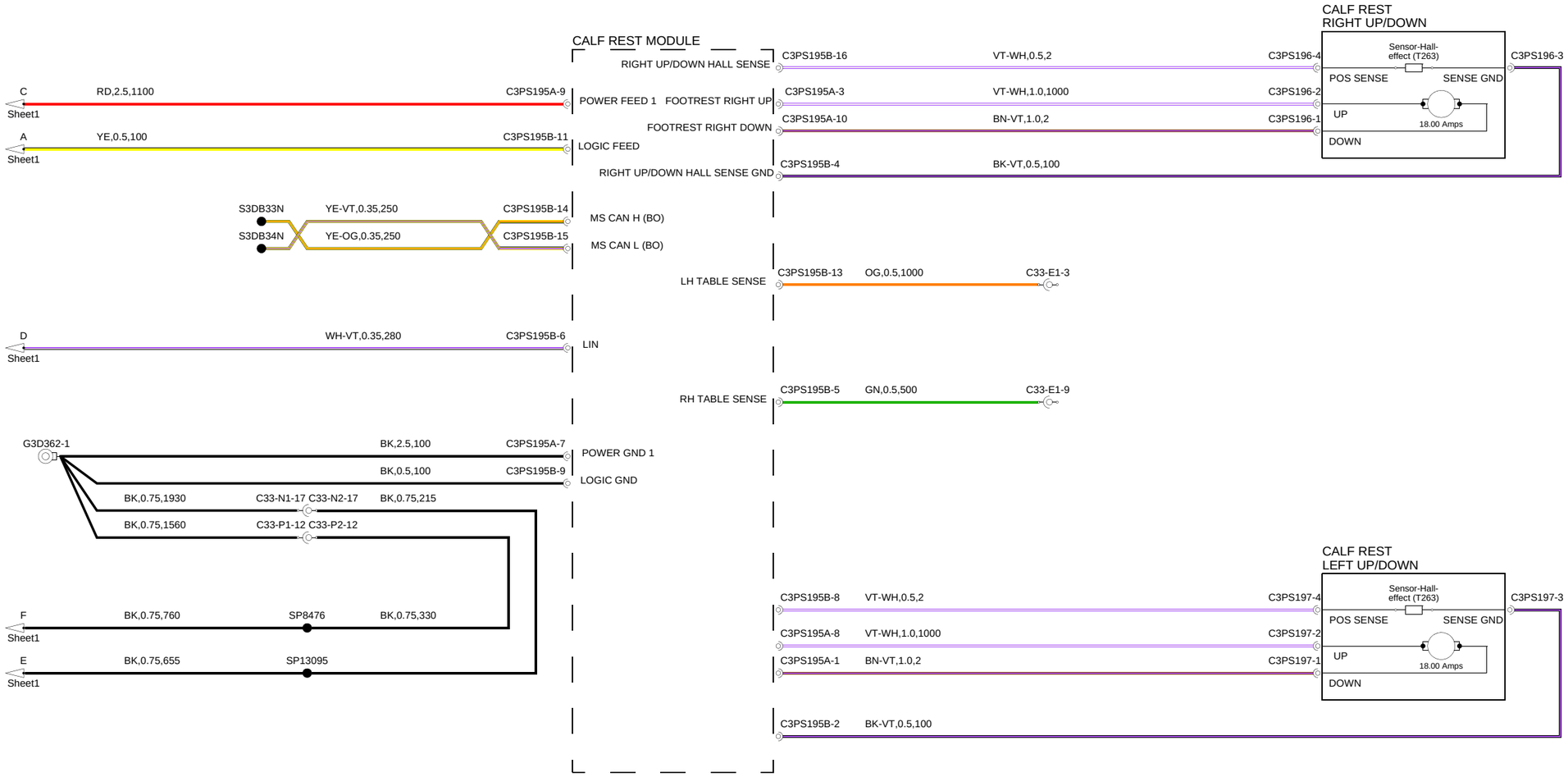
CALF REST MODULE
CALF REST
RIGHT UP/DOWN
Sensor-Hall-effect (T263)
POS SENSE
SENSE GND
UP
DOWN
18.00 Amps
C3PS196-3
RIGHT UP/DOWN HALL SENSE
C3PS195B-16
VT-WH,0.5,2
C3PS196-4
C
RD,2.5,1100
C3PS195A-9
POWER FEED 1
FOOTREST RIGHT UP
C3PS195A-3
VT-WH,1.0,1000
C3PS196-2
FOOTREST RIGHT DOWN
C3PS195A-10
BN-VT,1.0,2
C3PS196-1
A
YE,0.5,100
C3PS195B-11
LOGIC FEED
RIGHT UP/DOWN HALL SENSE GND
C3PS195B-4
BK-VT,0.5,100
Sheet1
S3DB33N
YE-VT,0.35,250
C3PS195B-14
MS CAN H (BO)
S3DB34N
YE-OG,0.35,250
C3PS195B-15
MS CAN L (BO)
LH TABLE SENSE
C3PS195B-13
OG,0.5,1000
C33-E1-3
D
WH-VT,0.35,280
C3PS195B-6
LIN
RH TABLE SENSE
C3PS195B-5
GN,0.5,500
C33-E1-9
G3D362-1
BK,2.5,100
C3PS195A-7
POWER GND 1
BK,0.5,100
C3PS195B-9
LOGIC GND
BK,0.75,1930
C33-N1-17 C33-N2-17
BK,0.75,215
BK,0.75,1560
C33-P1-12 C33-P2-12
CALF REST
LEFT UP/DOWN
Sensor-Hall-effect (T263)
POS SENSE
SENSE GND
UP
DOWN
18.00 Amps
C3PS197-3
C3PS195B-8
VT-WH,0.5,2
C3PS197-4
C3PS195A-8
VT-WH,1.0,1000
C3PS197-2
C3PS195A-1
BN-VT,1.0,2
C3PS197-1
F
BK,0.75,760
SP8476
BK,0.75,330
Sheet1
E
BK,0.75,655
SP13095
Sheet1
C3PS195B-2
BK-VT,0.5,100